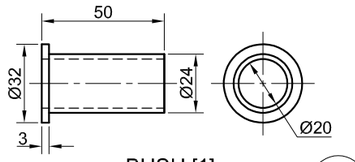

BUSH [1]

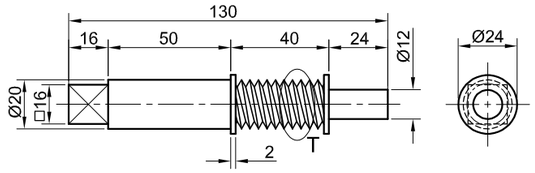

WORM SHAFT [2]

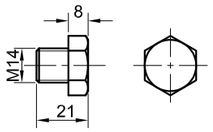

M14 RETAINING BOLT [3]

AN EXAMPLE OF A CONVENTIONAL REPRESENTATION OF A WORM GEAR ASSEMBLY

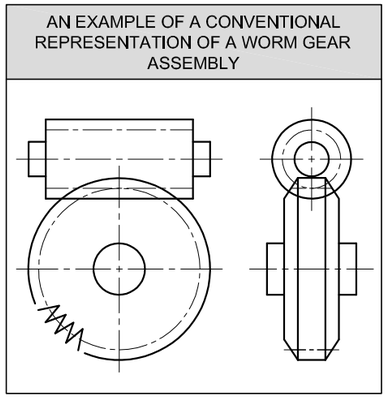

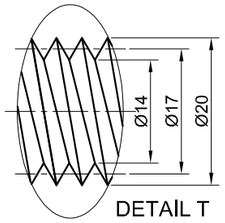

DETAIL T

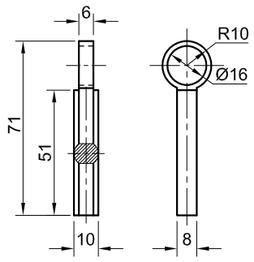

PUMP PLUNGER [4]

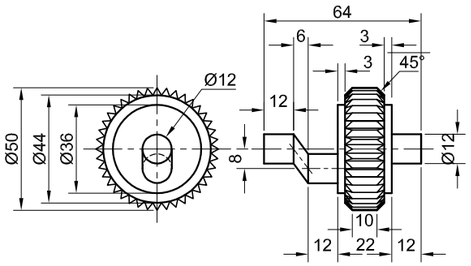

CRANK GEAR [5]

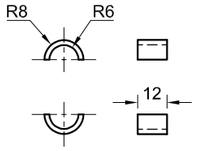

SPLIT BUSH [6]

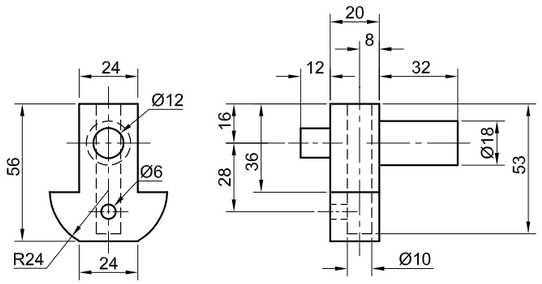

PUMP HOUSING [7]

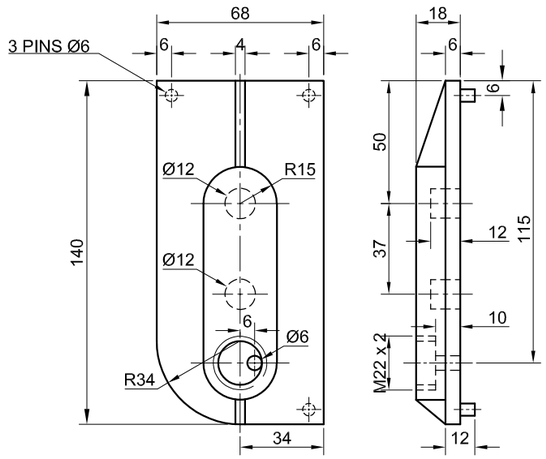

COVER PLATE [8]

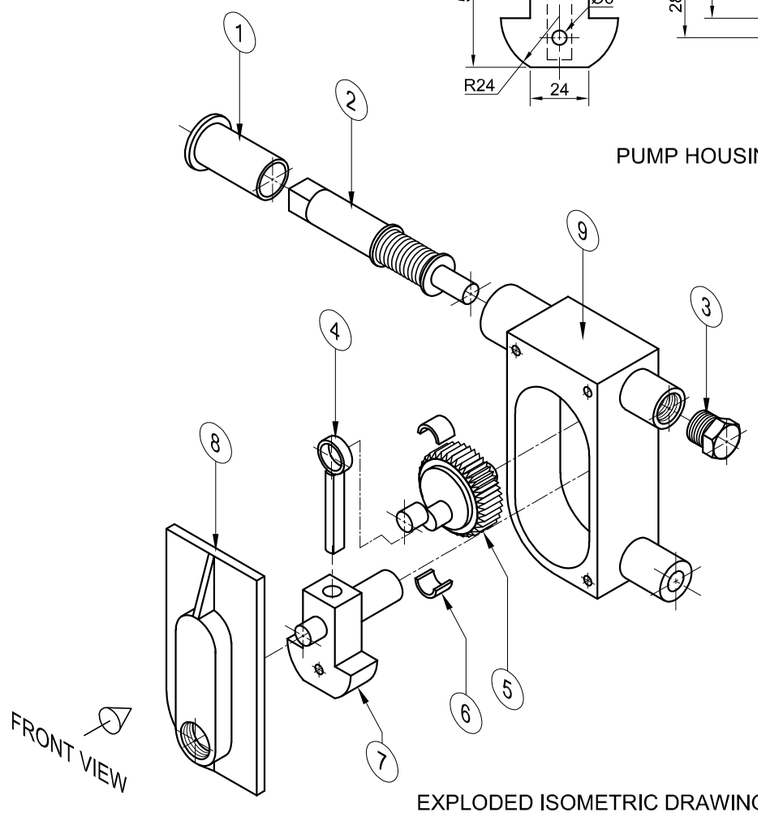

EXPLODED ISOMETRIC DRAWING

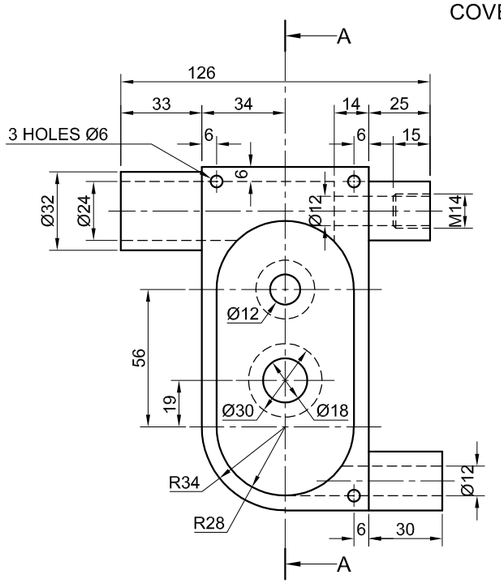

PUMP BODY [9]

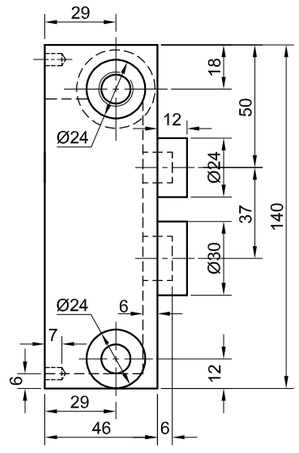

QUESTION 4: MECHANICAL ASSEMBLY

Given:

- The exploded isometric drawing of the parts of an oil pump assembly, showing the position of each part relative to all the others
- Orthographic views of each of the parts of the oil pump assembly
- An example of a conventional representation of a worm gear assembly.

Instructions:

- Answer this question on page 6.
- Draw, to scale 1 : 1 and in third-angle orthographic projection, the following views of the assembled parts of the oil pump assembly:
  - 4.1 **The front view** as seen from the direction of the arrow shown on the exploded isometric drawing.
  - 4.2 **A sectional right view** on cutting plane A-A. The cutting plane, which passes vertically through the oil pump assembly, is shown on the front view of the pump body (part 9).

NOTE:

- Planning is essential.
- The drawing must comply with the guidelines as contained in the *SANS 10111*.
- Show THREE faces of the M14 retaining bolt (part 3) in the front view.
- Draw a conventional representation of the worm gear assembly in the sectional right view.
- Add cutting plane A-A.
- NO hidden detail is required. **[96]**

PARTS LIST

	PARTS	QUANTITY	MATERIAL
1	BUSH	1	BRONZE
2	WORM SHAFT	1	EN 8
3	M14 RETAINING BOLT	1	BRASS
4	PUMP PLUNGER	1	BRASS
5	CRANK GEAR	1	EN 19
6	SPLIT BUSH	2	BRONZE
7	PUMP HOUSING	1	BRASS
8	COVER PLATE	1	MILD STEEL
9	PUMP BODY	1	STAINLESS STEEL

BVJ PROJECTS CC
101 FLAMINGO INDUSTRIAL PARK
www.BVJ.co.za
☏ 012 345 6789

OIL PUMP

ALL DIMENSIONS ARE IN MILLIMETRES.

STAPLE

FOR OFFICIAL USE ONLY	
INCORRECT ORTHOGRAPHIC PROJECTION	
INCORRECT OVERALL SCALE	
INCORRECT HATCHING	
PARTS NOT ASSEMBLED	
TOTAL PENALTIES (-)	

ASSESSMENT CRITERIA					
FRONT VIEW					
		POSSIBLE	OBTAINED	SIGN	MODERATED
1	COVER PLATE	8			
2	PUMP BODY + BUSH	5			
3	WORM SHAFT	$2\frac{1}{2}$			
4	M14 RETAINING BOLT	$4\frac{1}{2}$			
SUBTOTAL		**20**			
SECTIONAL RIGHT VIEW					
1	COVER PLATE	$11\frac{1}{2}$			
2	PUMP BODY	$11\frac{1}{2}$			
3	CRANK GEAR + SHAFT	17			
4	PUMP PLUNGER	7			
5	SPLIT BUSH	3			
6	PUMP HOUSING	10			
SUBTOTAL		**60**			
GENERAL					
1	CENTRE LINES	4			
2	SECTION A-A	3			
3	ASSEMBLY	9			
SUBTOTAL		**16**			
TOTAL		**96**			
PENALTIES (-)					
GRAND TOTAL					

EXAMINATION NUMBER	
EXAMINATION NUMBER	6

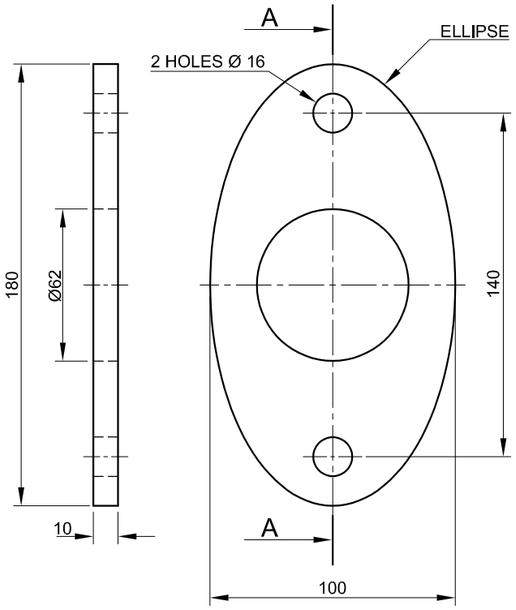

BASE [1]

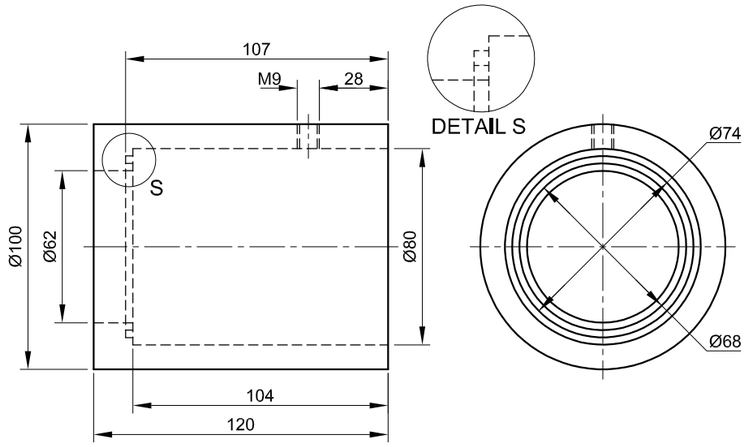

SLEEVE [2]

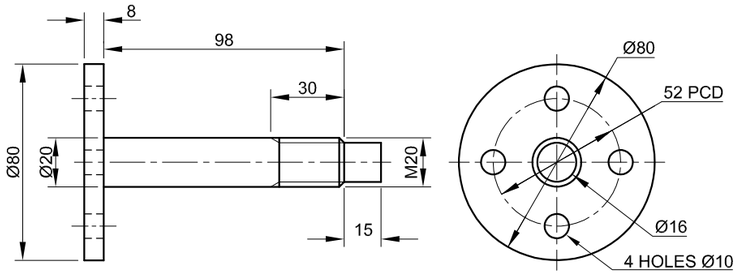

PLUNGER [4]

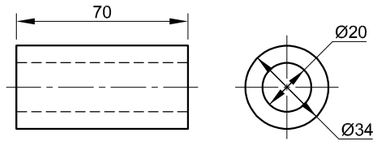

BUSH [6]

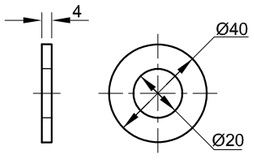

WASHER [8]

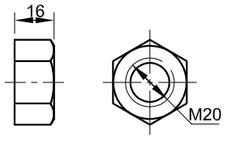

M20 NUT [9]

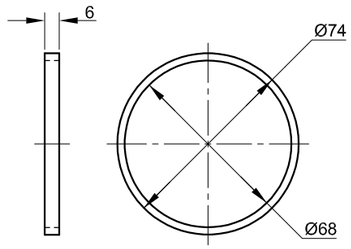

BUFFER [3]

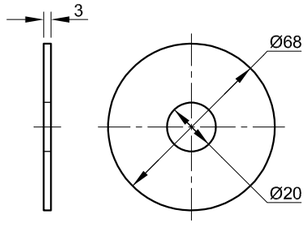

SEAL [5]

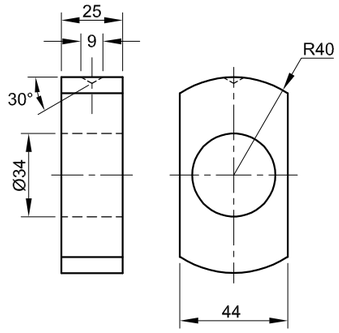

GUIDE [7]

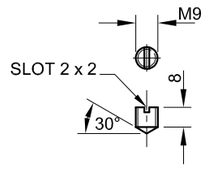

GRUB SCREW [10]

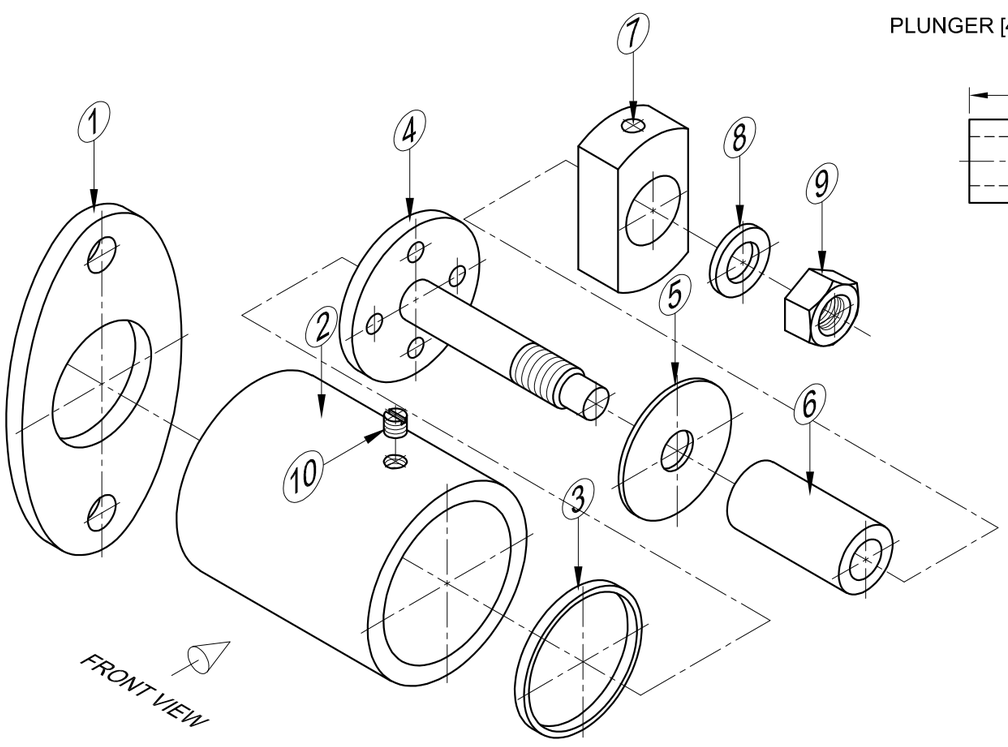

EXPLODED ISOMETRIC DRAWING

QUESTION 4: MECHANICAL ASSEMBLY

Given:

- The exploded isometric drawing of the parts of a sleeve valve assembly, showing the position of each part relative to all the others
- Orthographic views of each of the parts of the sleeve valve assembly

Instructions:

- Answer this question on page 6.
- Draw, to scale 1 : 1 and in third-angle orthographic projection, the following views of the assembled parts of the sleeve valve assembly:
  - 4.1 **A sectional front view** on cutting plane A-A, as seen from the direction of the arrow shown on the exploded isometric drawing. The cutting plane is shown on the right view of the base (part 1).
  - 4.2 **The right view.** Show ALL hidden detail.

NOTE:

- Planning is essential.
- ALL drawings must comply with the guidelines as contained in the *SANS 10111*.
- The convention of symmetry may NOT be applied.
- The sleeve (part 2) must be placed against the base (part 1) and welded in place. Show the given welding symbol on the sectional front view.
- The plunger (part 4) must be drawn in position against the buffer (part 3).
- Show THREE faces of the M20 nut in the front view.
- Add cutting plane A-A.
- NO hidden detail is required on the front view. **[90]**

PARTS LIST

	PART	QUANTITY	MATERIAL
1	BASE	1	STAINLESS STEEL
2	SLEEVE	1	STAINLESS STEEL
3	BUFFER	1	RUBBER
4	PLUNGER	1	STAINLESS STEEL
5	SEAL	1	RUBBER
6	BUSH	1	BRASS
7	GUIDE	1	STAINLESS STEEL
8	WASHER	1	STAINLESS STEEL
9	M20 NUT	1	STAINLESS STEEL
10	GRUB SCREW	1	STAINLESS STEEL

WELDING SYMBOL
NOTE: DRAWN TO SCALE

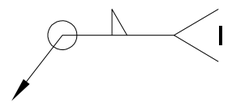

ALL DIMENSIONS ARE IN MILLIMETRES

FILLETS ARE R3 AND ROUNDINGS ARE R5

WC
PATENTS

FARMER IDEAS
NAMPO
www.nampo.co.za

TITLE
SLEEVE VALVE

STAPLE

FOR OFFICIAL USE ONLY	
INCORRECT ORTHOGRAPHIC PROJECTION	
INCORRECT OVERALL SCALE	
INCORRECT HATCHING	
PARTS NOT ASSEMBLED	
TOTAL PENALTIES (-)	

ASSESSMENT CRITERIA					
RIGHT VIEW					
		POSSIBLE	OBTAINED	SIGN	MODERATED
1	BASE	6			
2	SLEEVE	1			
3	PLUNGER	1			
4	SEAL	$\frac{1}{2}$			
5	GUIDE	1			
6	NUT + WASHER	3			
7	HIDDEN DETAIL	$6\frac{1}{2}$			
SUBTOTAL		19			
SECTIONAL FRONT VIEW					
1	BASE	7			
2	SLEEVE + GRUB SCREW	$11\frac{1}{2}$			
3	BUFFER	5			
4	PLUNGER	14			
5	SEAL	3			
6	BUSH	2			
7	GUIDE	3			
8	NUT + WASHER	6			
SUBTOTAL		$51\frac{1}{2}$			
GENERAL					
1	CENTRE LINES	4			
2	ASSEMBLY	9			
3	CUTTING PLANE	3			
4	WELDING SYMBOL	$3\frac{1}{2}$			
SUBTOTAL		$19\frac{1}{2}$			
TOTAL		90			
PENALTIES (-)					
GRAND TOTAL					

EXAMINATION NUMBER	
EXAMINATION NUMBER	6

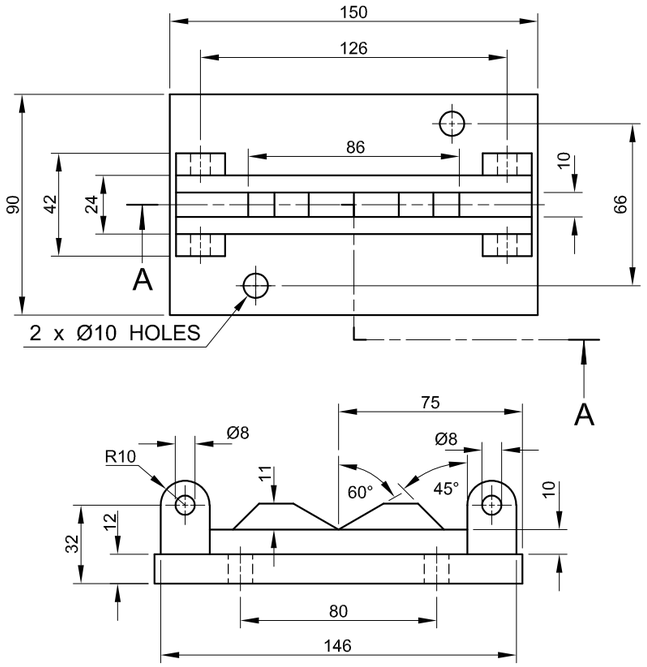

BASE [1]

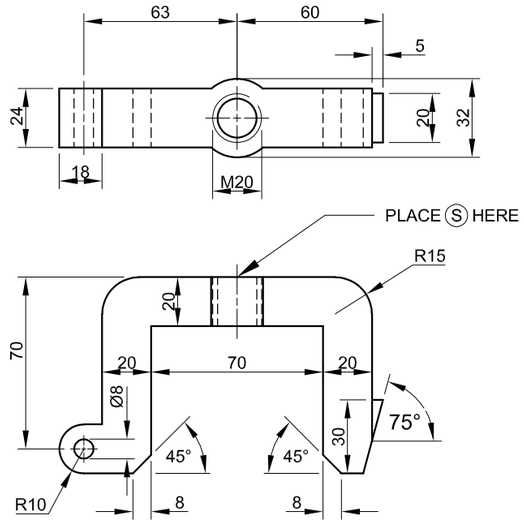

FRAME [2]

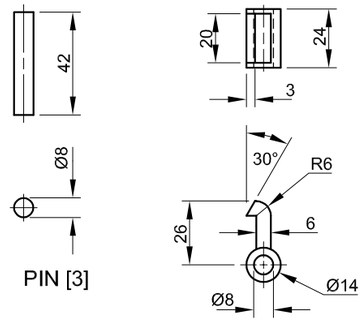

PIN [3]

HOOK [4]

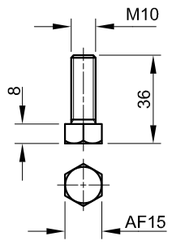

M10 BOLT [6]

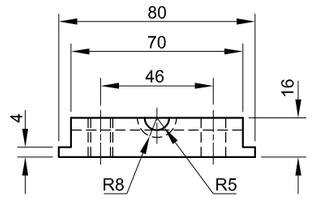

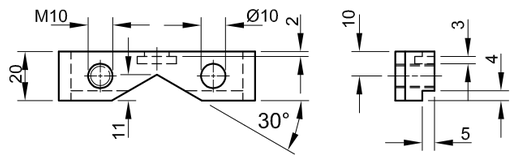

JAW [5]

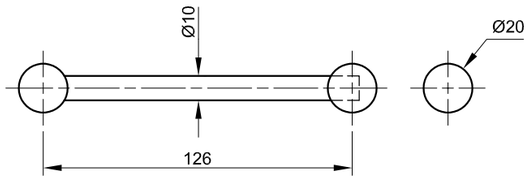

LEVER [8]

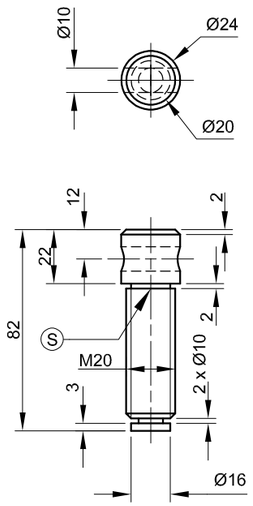

WORM SCREW [7]

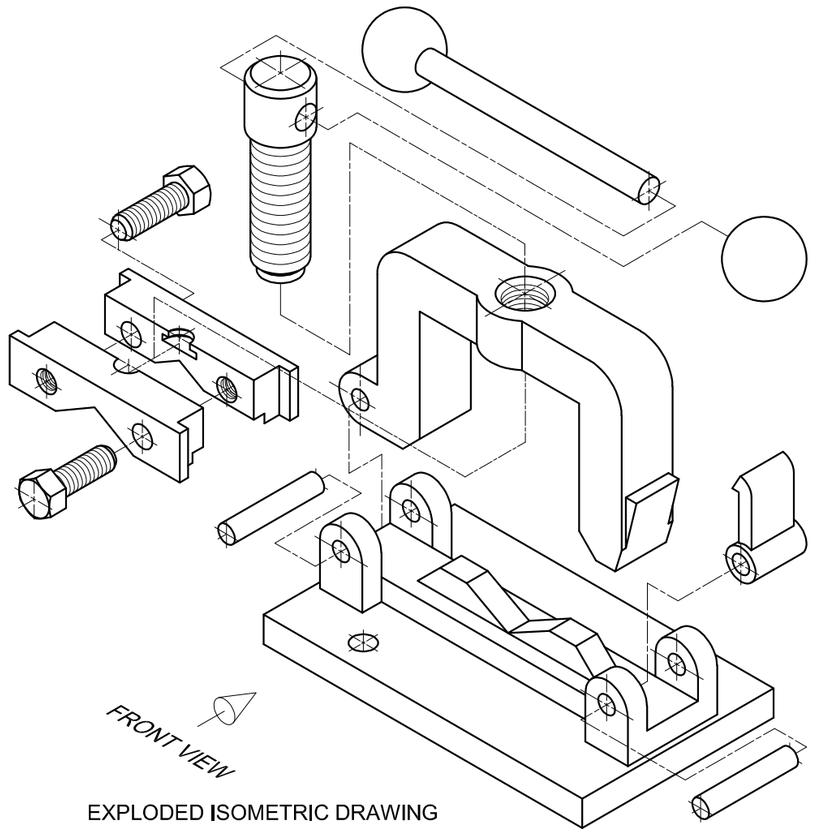

EXPLODED ISOMETRIC DRAWING

QUESTION 4: MECHANICAL ASSEMBLY

Given:

- The exploded isometric drawing of the parts of a pipe clamp assembly, showing the position of each part relative to all the others
- Orthographic views of each of the parts of the pipe clamp assembly

Instructions:

- Answer this question on page 6.
- Draw, to scale 1 : 1 and in third-angle orthographic projection, the following views of the assembled parts of the pipe clamp assembly:
  - **4.1 A half-sectional front view** on cutting plane A-A. Show the left side in section, as seen from the direction of the arrow shown on the exploded isometric drawing. The cutting plane is shown on the top view of the base (part 1).
  - **4.2 The top view**

NOTE:

- Planning is essential.
- ALL drawings must comply with the guidelines as contained in the *SANS 10111*.
- The convention of symmetry may not be applied.
- The worm screw (part 7) must be completely screwed into the frame (part 2) so that point S will be at the indicated position.
- The lever (part 8) must be placed in the centre of the worm screw (part 7).
- In the top view, draw only the right-side M10 bolt. Show TWO faces of the bolt.
- Add cutting plane A-A.
- NO hidden detail is required. **[96]**

PARTS LIST

	PART	QUANTITY	MATERIAL
1	BASE	1	CAST IRON
2	FRAME	1	MILD STEEL
3	PIN	2	MILD STEEL
4	HOOK	1	MILD STEEL
5	JAW	2	TOOL STEEL
6	M10 BOLT	2	TOOL STEEL
7	WORM SCREW	1	HARDENED STEEL
8	LEVER	1	HARDENED STEEL

ALL DIMENSIONS ARE IN MILLIMETRES	DRAWN: WILLEM DATE: 10/11/2016
FILLETS ARE R3 AND ROUNDINGS ARE R5	DRAWING PROGRAM: CAD 2016

WR PROJECTS

8 VON WHEILIG STREET
ALIES PARK 1791
www.sn_king.co.za
☎ 069 313 1574

TITLE PIPE CLAMP

STAPLE

FOR OFFICIAL USE ONLY	
INCORRECT ORTHOGRAPHIC PROJECTION	
INCORRECT OVERALL SCALE	
INCORRECT HATCHING	
PARTS NOT ASSEMBLED	
TOTAL PENALTIES (-)	

ASSESSMENT CRITERIA					
TOP VIEW					
		POSSIBLE	OBTAINED	SIGN	MODERATED
1	BASE	8			
2	FRAME	5			
3	HOOK	5			
4	JAW + M10 BOLT	$6\frac{1}{2}$			
5	WORM SCREW + LEVER	4			
SUBTOTAL		$28\frac{1}{2}$			
SECTIONAL FRONT VIEW					
1	BASE	$9\frac{1}{2}$			
2	FRAME	8			
3	PINS + HOOK	$3\frac{1}{2}$			
4	JAW + M10 BOLT	$9\frac{1}{2}$			
5	WORM SCREW	$9\frac{1}{2}$			
6	LEVER	3			
SUBTOTAL		43			
GENERAL					
1	CENTRE LINES	$10\frac{1}{2}$			
2	ASSEMBLY	9			
3	CUTTING PLANE	5			
SUBTOTAL		$24\frac{1}{2}$			
TOTAL		96			
PENALTIES (-)					
GRAND TOTAL					

EXAMINATION NUMBER	
EXAMINATION NUMBER	6

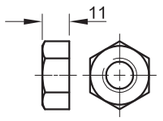

M14 NUT [1]

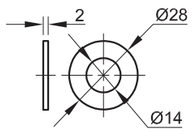

WASHER [2]

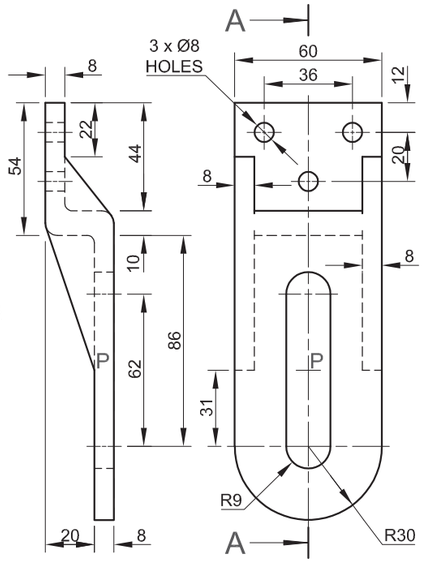

BRACKET [3]

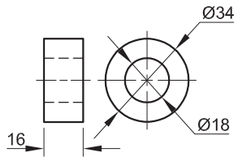

SPACER [4]

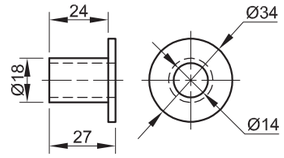

BUSH [5]

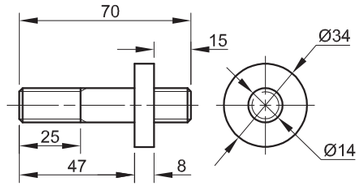

M14 SHAFT [6]

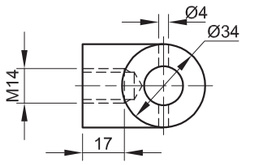

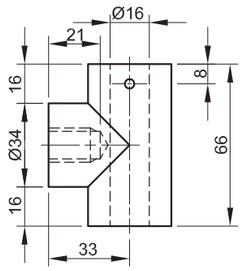

SWIVEL ARM [7]

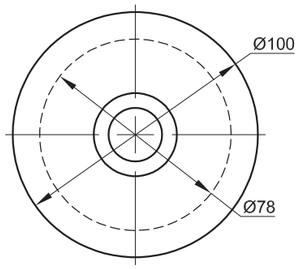

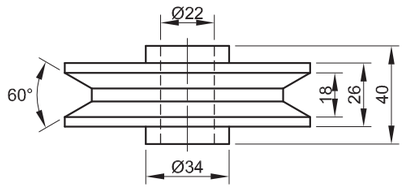

PULLEY [8]

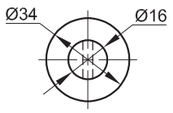

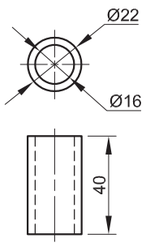

BUSH [9]

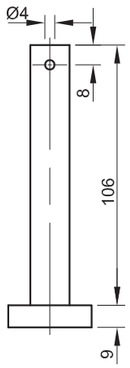

PIN [10]

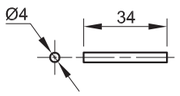

DOWEL PIN [11]

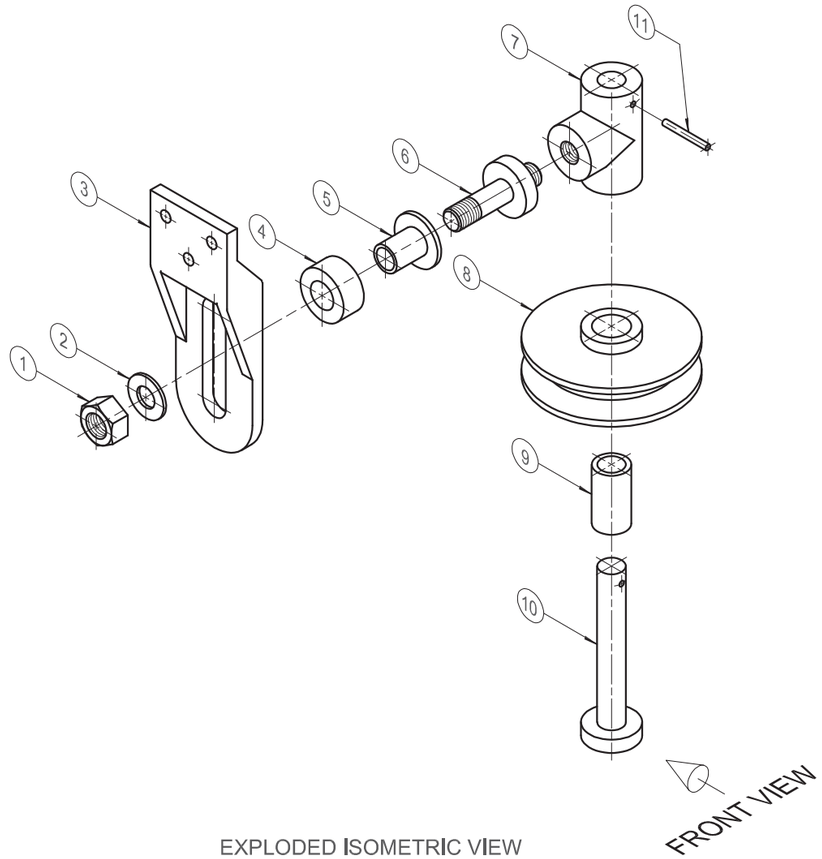

EXPLODED ISOMETRIC VIEW

QUESTION 4: MECHANICAL ASSEMBLY

Given:

- Orthographic views of each of the parts of a swivel pulley assembly
- The exploded isometric drawing of the parts of a swivel pulley assembly, showing the position of each part relative to all the others

Instructions:

- Answer this question on page 6.
- Draw, to scale 1 : 1 and in third-angle orthographic projection, the following views of the assembled parts of the swivel pulley assembly:
  - **4.1 A sectional front view** on cutting plane A-A, as seen from the direction of the arrow shown on the exploded isometric drawing. The cutting plane is shown on the right view of the bracket (part 3).
  - **4.2 The right view**

NOTE:

- Layout planning is essential.
- ALL drawings must comply with the guidelines as contained in the *SANS 10111*.
- The convention of symmetry may not be applied.
- Place the M14 shaft (part 6) at point P in the centre of the slotted groove of the bracket (part 3).
- Show THREE faces of the M14 nut in the front view.
- No hidden detail is required.
- Add cutting plane A-A. **[88]**

PARTS LIST

	PART	QUANTITY	MATERIAL
1	M14 NUT	1	MILD STEEL
2	WASHER	1	MILD STEEL
3	BRACKET	1	MILD STEEL
4	SPACER	1	MILD STEEL
5	BUSH	1	BRASS
6	M14 SHAFT	1	MILD STEEL
7	SWIVEL ARM	1	MILD STEEL
8	PULLEY	1	CAST IRON
9	BUSH	1	BRASS
10	PIN	1	MILD STEEL
11	DOWEL PIN	1	MILD STEEL

ALL DIMENSIONS ARE IN MILLIMETRES	DRAWN: JOHAN DATE: 10/11/2016	APULLEY MANUFACTURING	MAIN STREET GEORGE 6520 www.apm.co.za
FILLETS ARE R3 AND ROUNDINGS ARE R5	DRAWING PROGRAM: CAD 2016	TITLE SWIVEL PULLEY	5

STAPLE

FOR OFFICIAL USE ONLY		
NOT IN THIRD ANGLE		
INCORRECT OVERALL SCALE		
INCORRECT HATCHING		
PARTS NOT ASSEMBLED		
PARTS DRAWN IN FREEHAND		
PENALTY TOTAL (-)		

ASSESSMENT CRITERIA					
RIGHT VIEW					
		POSSIBLE	OBTAINED	SIGN	MODERATED
1	BRACKET	7			
2	SWIVEL ARM	2			
3	PULLEY	4			
4	M14 SHAFT	2			
	SUBTOTAL	**15**			
SECTIONAL FRONT VIEW					
1	M14 NUT	5			
2	WASHER	2			
3	BRACKET	14			
4	SPACER	2			
5	BUSH	2			
6	M14 SHAFT	9			
7	SWIVEL ARM	$8\frac{1}{2}$			
8	PULLEY	$5\frac{1}{2}$			
9	BUSH	2			
10	SHAFT + PIN	4			
	SUBTOTAL	**54**			
GENERAL					
1	CENTRE LINES	6			
2	ASSEMBLY	10			
3	CUTTING PLANE	3			
	SUBTOTAL	**19**			
	TOTAL	**88**			
PENALTY(-)					
	GRAND TOTAL				
EXAMINATION NUMBER					
EXAMINATION NUMBER					6

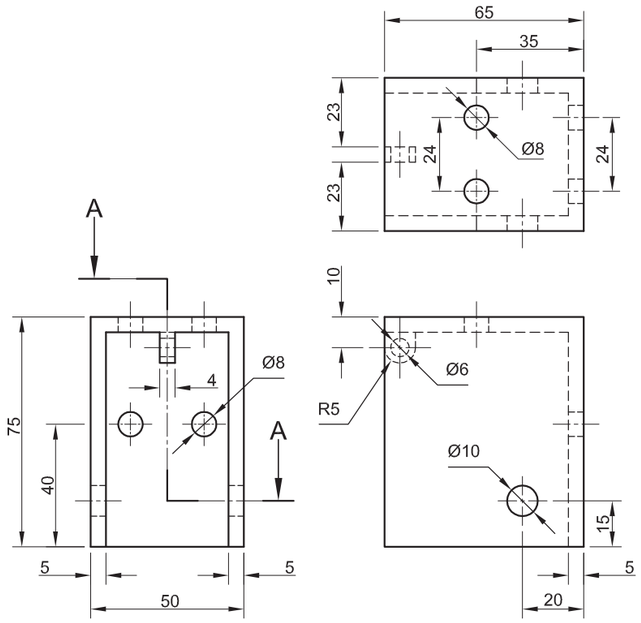

HOUSING [1]

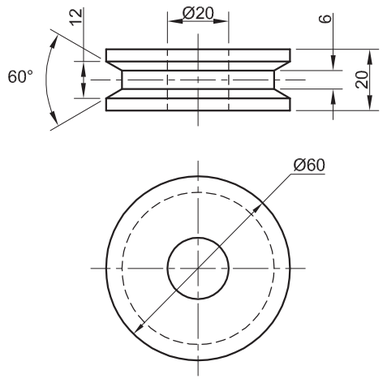

PULLEY [7]

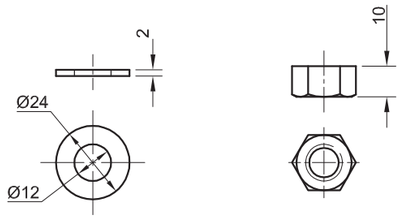

WASHER [8]

M12 NUT [9]

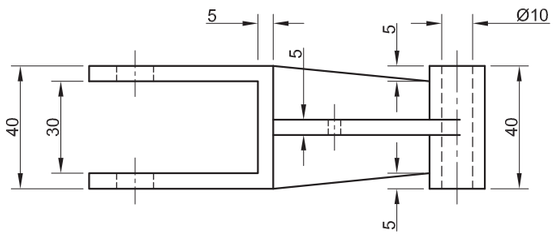

FORK [2]

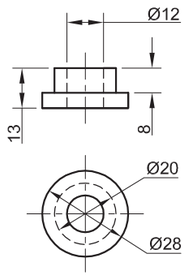

BUSH [6]

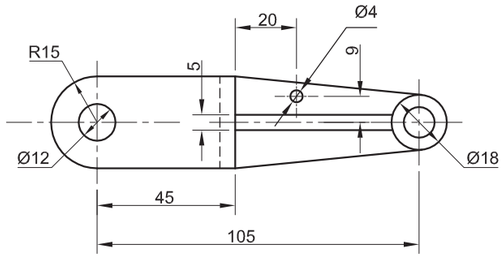

FORK [2]

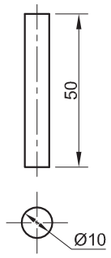

PIN [3]

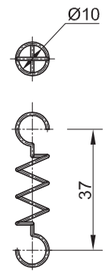

SPRING [4]

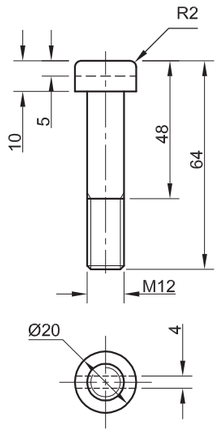

M12 BOLT [5]

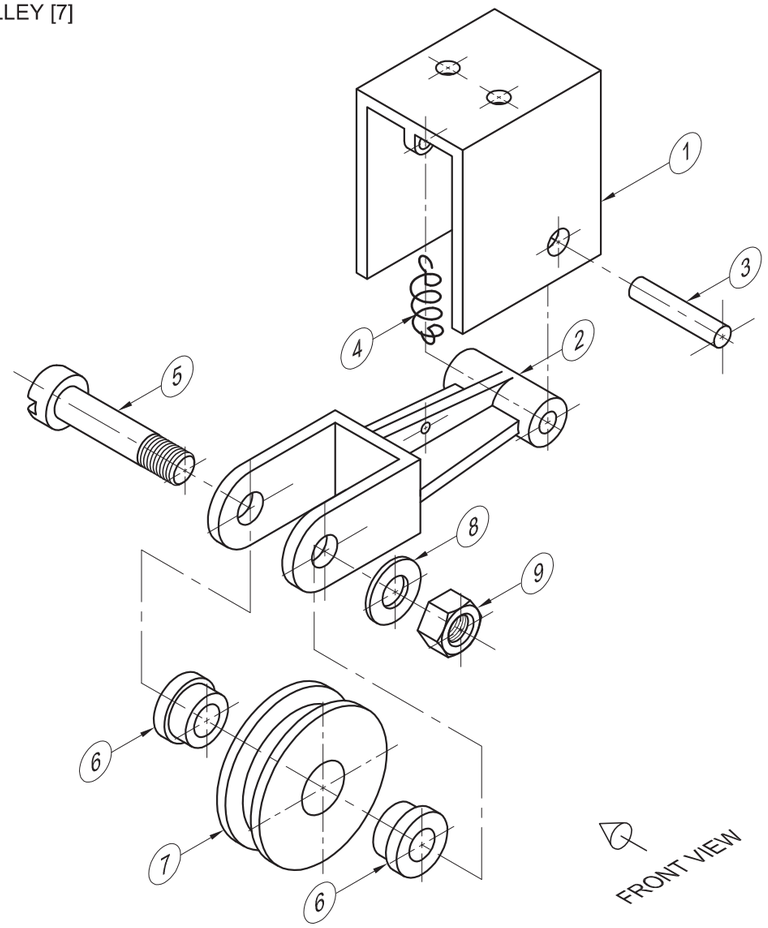

EXPLODED ISOMETRIC DRAWING

QUESTION 4: MECHANICAL ASSEMBLY

Given:

- Orthographic views of each of the parts of a tension pulley assembly
- The exploded isometric drawing of the parts of the tension pulley assembly, showing the position of each part relative to all the others

Instructions:

- Answer this question on page 6.
- Draw, to scale 1 : 1 and in third-angle orthographic projection, the following views of the assembled parts of the tension pulley assembly:
  - **4.1 The front view** as seen from the direction of the arrow shown on the exploded isometric drawing
  - **4.2 A half-sectional top view** on cutting plane A-A. Show the front half in section, in accordance with the cutting plane that is shown on the left view of the housing (part 1).
  - **4.3 The left view**

NOTE:

- Planning is essential.
- ALL drawings must comply with the guidelines contained in the *SANS 10111*.
- The convention of symmetry may not be applied.
- The spring (part 4) must be drawn in convention and in neat freehand.
- Show THREE faces of the M12 nut in the top view.
- Add cutting plane A-A.
- NO hidden detail is required. **[92]**

PARTS LIST

	PART	QUANTITY	MATERIAL
1	HOUSING	1	MILD STEEL
2	FORK	1	CAST IRON
3	PIN	1	MILD STEEL
4	SPRING	1	SPRING STEEL
5	M12 BOLT	1	MILD STEEL
6	BUSH	2	BRASS
7	PULLEY	1	CAST IRON
8	WASHER	1	MILD STEEL
9	M12 NUT	1	MILD STEEL

TITLE

TENSION PULLEY

GENERAL
ENGINEERING WORKS

54 PEARL ROAD
PERSEVERANCE
6000
041 335 1600

ALL DIMENSIONS ARE IN MILLIMETRES.

ALL UNSPECIFIED RADII ARE R5.

STAPLE

FOR OFFICIAL USE ONLY	
INCORRECT ORTHOGRAPHIC PROJECTION	
INCORRECT SCALE	
INCORRECT HATCHING	
PARTS NOT ASSEMBLED	
TOTAL PENALTIES (-)	

ASSESSMENT CRITERIA					
FRONT VIEW					
1	HOUSING + PIN	3			
2	FORK	4			
3	PULLEY	1			
4	M12 BOLT + WASHER + M12 NUT	6			
SUBTOTAL		**14**			
SECTIONAL TOP VIEW					
1	HOUSING + PIN	7			
2	FORK	$10\frac{1}{2}$			
3	M12 BOLT	7			
4	BUSH	4			
5	PULLEY	$7\frac{1}{2}$			
6	WASHER + M12 NUT	$4\frac{1}{2}$			
SUBTOTAL		**$40\frac{1}{2}$**			
LEFT VIEW					
1	HOUSING	$4\frac{1}{2}$			
2	FORK	$1\frac{1}{2}$			
3	SPRING	2			
4	BUSH	1			
5	PULLEY	$4\frac{1}{2}$			
6	M12 BOLT + WASHER + M12 NUT	$8\frac{1}{2}$			
SUBTOTAL		**22**			
GENERAL					
1	CENTRE LINES	$6\frac{1}{2}$			
2	ASSEMBLY	9			
SUBTOTAL		**$15\frac{1}{2}$**			
TOTAL		**92**			
PENALTIES (-)					
GRAND TOTAL					

EXAMINATION NUMBER	
EXAMINATION NUMBER	6

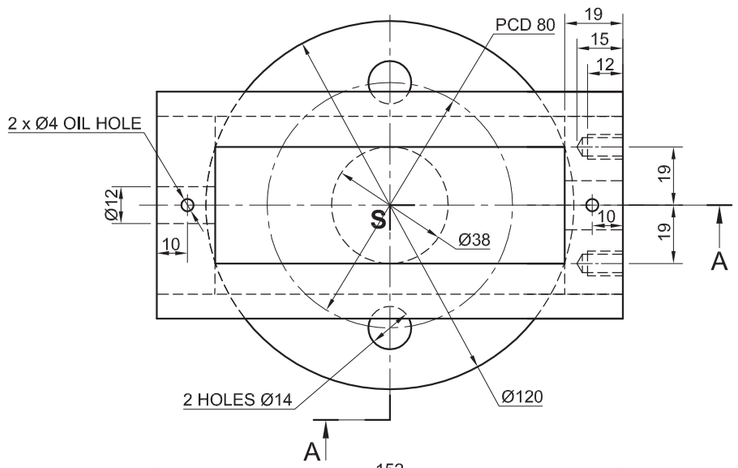

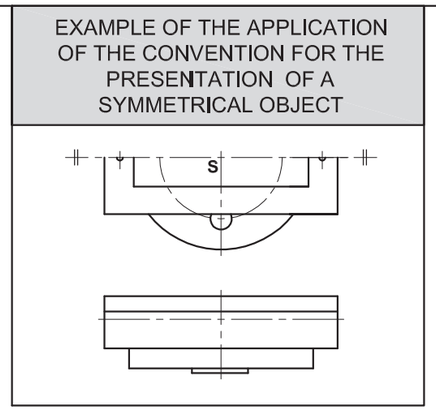

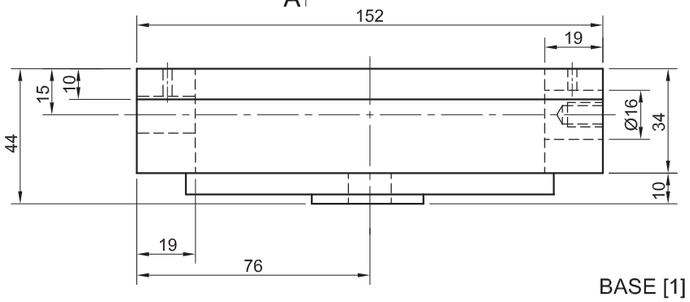

BASE [1]

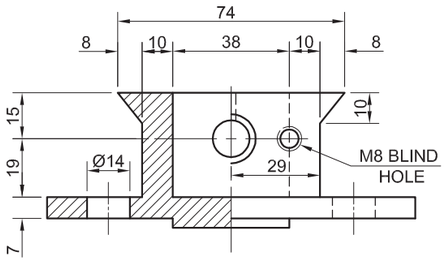

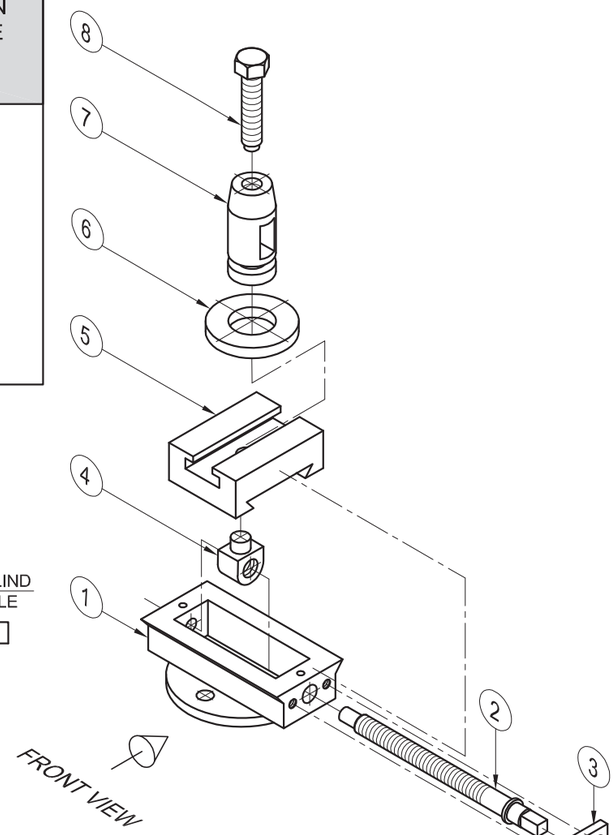

EXPLODED ISOMETRIC DRAWING

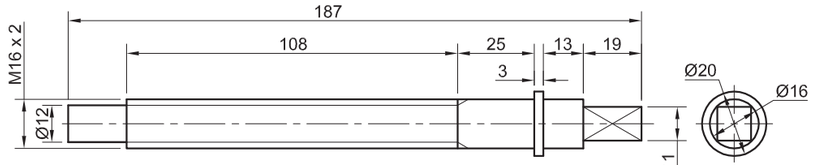

M16 ADJUSTING SCREW [2]

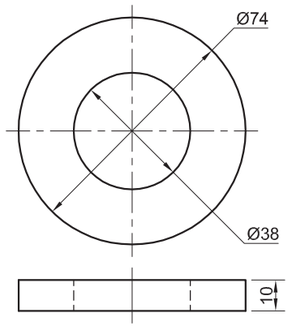

SPACER [6]

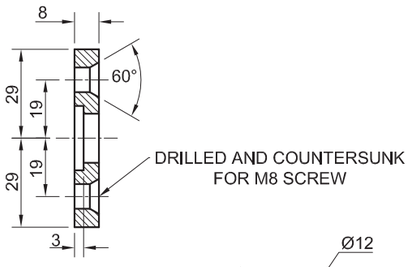

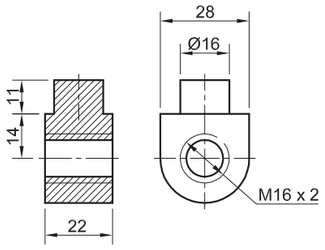

SLIDE GUIDE [4]

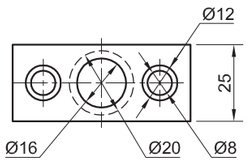

PLATE [3]

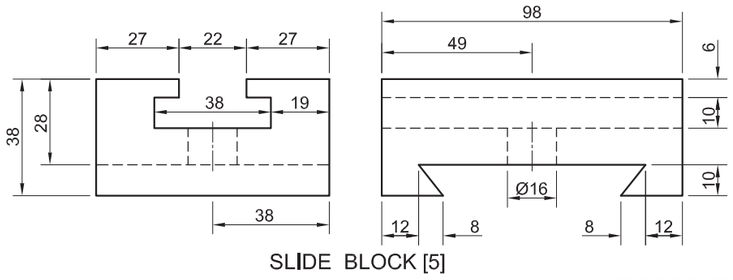

SLIDE BLOCK [5]

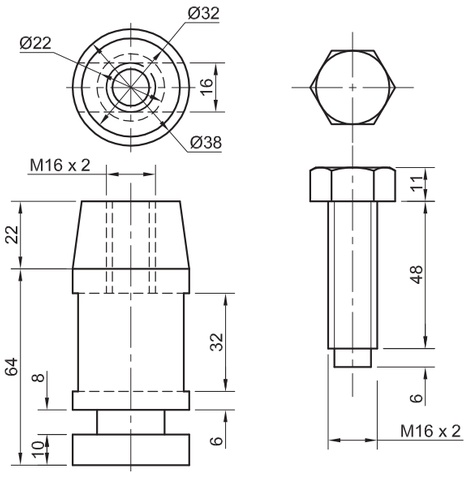

TOOL HOLDER [7] M16 BOLT [8]

QUESTION 4: MECHANICAL ASSEMBLY

Given:

- Orthographic views of each of the parts of a tool holder assembly
- An example of the application of the convention for the drawing of a symmetrical object
- The exploded isometric drawing of the parts of the tool holder assembly, showing the position of each part relative to all the others
- The top view centre line and reference point **S** on page 6

Instructions:

- Answer this question on page 6**.**
- Using the given centre line and reference point S, draw, to scale 1 : 1 and in third-angle orthographic projection, the following views of the assembled parts of the tool holder assembly:
  - **4.1 A half sectional front view** on cutting plane A-A**.** Show the right side in section, as seen from the direction of the arrow shown on the exploded isometric drawing. The cutting plane is shown on the top view of the base (part 1).
  - **4.2 The top view.** Show **only the front half** of the top view by applying the convention for the presentation of a symmetrical object**.**

NOTE:

- Planning is essential.
- ALL drawings must comply with the guidelines as contained in the *SANS 10111.*
- Apply the convention of symmetry only to the top view.
- Show THREE faces of the M16 bolt (part 8) in the front view**.**
- In this drawing the M16 bolt (part 8) must be completely screwed into the tool holder (part 7) **.**
- Add cutting plane A-A.
- NO hidden detail is required. **[88]**

PARTS LIST

	PARTS	QUANTITY	MATERIAL
1	BASE	1	CAST STEEL
2	M16 ADJUSTING SCREW	1	MILD STEEL
3	PLATE	1	MILD STEEL
4	SLIDE GUIDE	1	MILD STEEL
5	SLIDE BLOCK	1	CAST IRON
6	SPACER	1	MILD STEEL
7	TOOL HOLDER	1	MILD STEEL
8	M16 BOLT	1	MILD STEEL

BVJ PROJECTS CC
13 BALLACK STREET
NEW GERMANY
www.bvjpro.co.za
☏ 031BMUNICH

TOOL HOLDER

ALL DIMENSIONS ARE IN MILLIMETRES.

STAPLE

FOR OFFICIAL USE ONLY		
INCORRECT SCALE		
INCORRECT HATCHING		
PARTS NOT ASSEMBLED		
TOTAL		

ASSESSMENT CRITERIA					
TOP VIEW					
		POSSIBLE	OBTAINED	SIGN	MODERATED
1	BODY	$5\frac{1}{2}$			
2	ADJUSTING SCREW	6			
3	PLATE	1			
4	SLIDE BLOCK	$2\frac{1}{2}$			
5	SPACER	$\frac{1}{2}$			
6	TOOL HOLDER	1			
7	M16 BOLT	$2\frac{1}{2}$			
	SUBTOTAL	19			
SECTIONAL FRONT VIEW					
1	BODY	13			
2	ADJUSTING SCREW	10			
3	PLATE	3			
4	SLIDE GUIDE	$3\frac{1}{2}$			
5	SLIDE BLOCK	$4\frac{1}{2}$			
6	SPACER	3			
7	TOOL HOLDER	10			
8	M16 BOLT	8			
	SUBTOTAL	55			
GENERAL					
1	CENTRE LINES	3			
2	CUTTING PLANE	4			
3	ASSEMBLY	7			
	SUBTOTAL	14			
	TOTAL	88			
PENALTIES (-)					
	GRAND TOTAL				

EXAMINATION NUMBER

EXAMINATION NUMBER 6

BASIC-EDUCATION

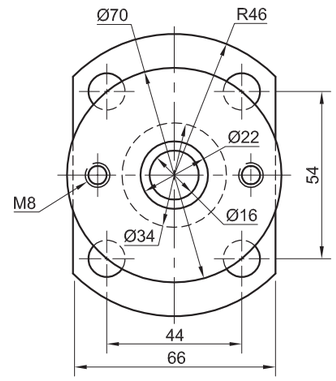

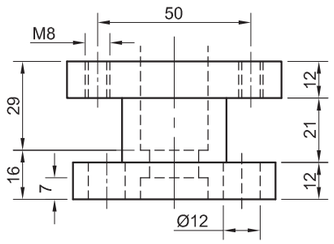

FILLER PIECE [2]

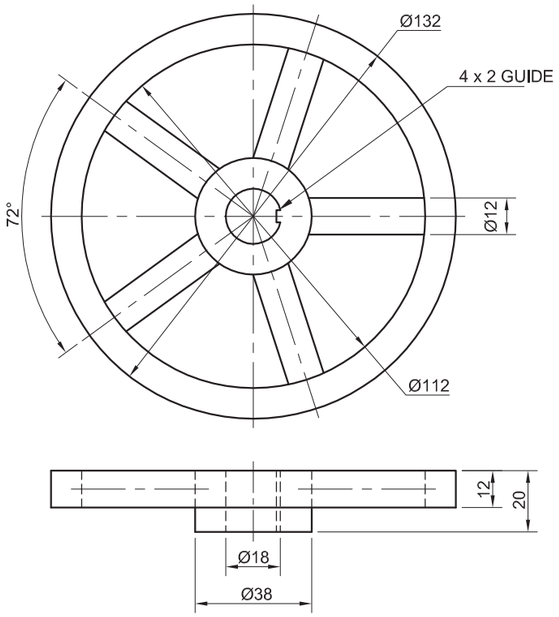

HAND WHEEL [4]

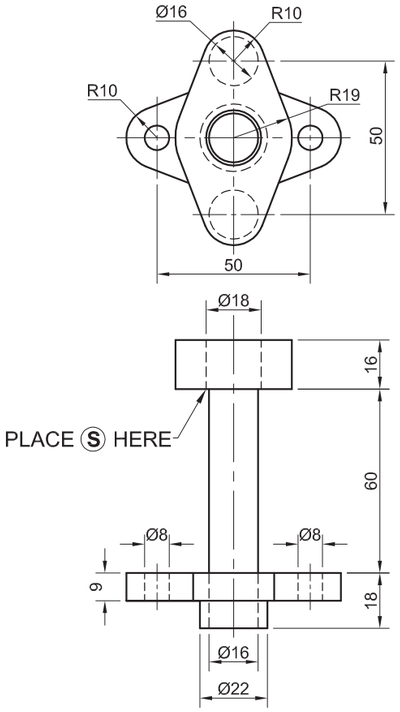

SPLIT PIECE [3]

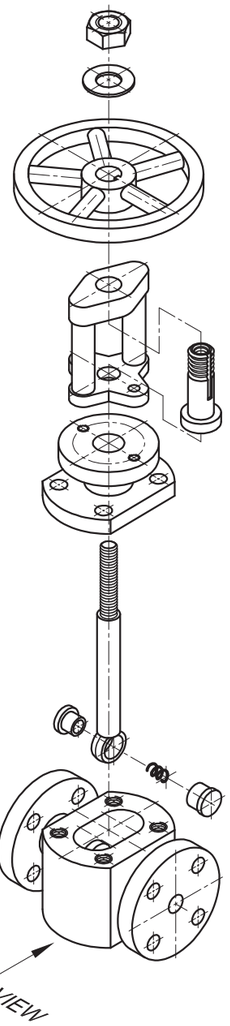

EXPLODED ISOMETRIC DRAWING

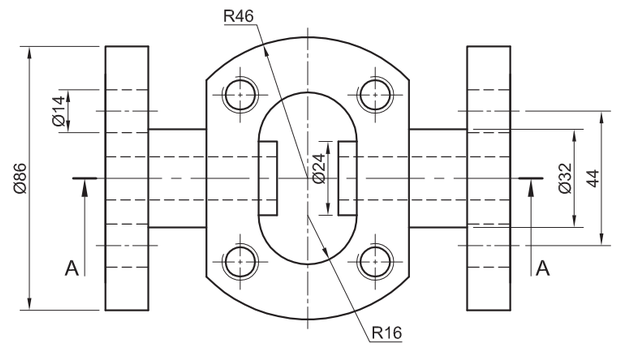

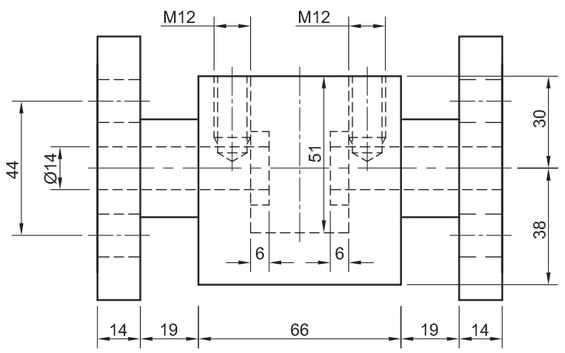

VALVE BASE [1]

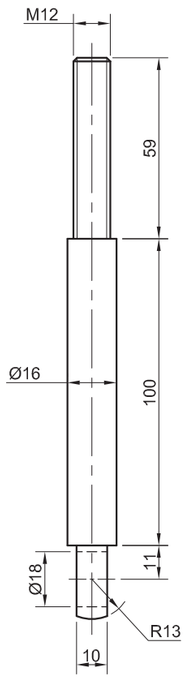

CONNECTING ROD [7]

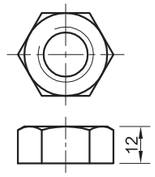

M18 NUT[10]

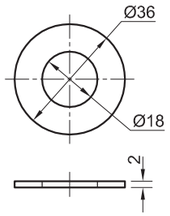

WASHER [9]

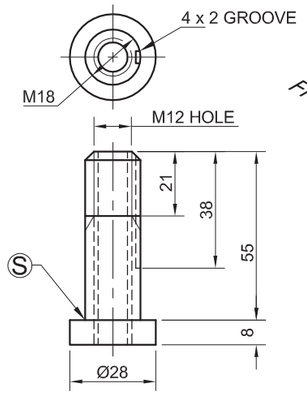

SPACING BOLT [8]

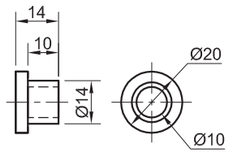

INNER VALVE CAP [5]

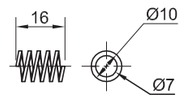

SPRING [6]

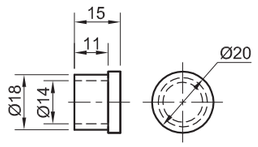

OUTER VALVE CAP [5]

QUESTION 4: MECHANICAL ASSEMBLY

Given:

- The exploded isometric drawing of the parts of a steam valve assembly, showing the position of each part relative to all the others.
- Orthographic views of each of the parts of the steam valve assembly.

Instructions:

- Answer this question on page 6.
- Draw, to scale 1 : 1 and in third-angle orthographic projection, **a sectional front view** on cutting plane A-A, as seen from the direction of the arrow shown on the exploded isometric drawing. The cutting plane, which passes vertically through the centre of the assembly, is shown on the top view of the valve base (part 1).
- ALL drawings must comply with the guidelines as contained in the *SANS 10111.*

NOTE:

- Planning is essential.
- The M12 bolts (part 12) which connect the filler piece (part 2) to the valve base (part 1) are not shown and not required to be drawn.
- The M8 bolts (part 11) which connect the filler piece (part 2) to the split piece (part 3) are not shown and not required to be drawn.
- The spacing bolt (part 8) must be placed through the split piece (part 3) so that point **S** will be at the indicated position.
- Show THREE faces of the M18 nut.
- NO hidden detail is required. **[98]**

PARTS LIST

	PARTS	QUANTITY	MATERIAL
1	VALVE BASE	1	CAST IRON
2	FILLER PIECE	1	CAST IRON
3	SPLIT PIECE	1	CAST IRON
4	HAND WHEEL	1	MILD STEEL
5	VALVE CAPS	2	STAINLESS STEEL
6	SPRING	1	SPRING STEEL
7	CONNECTING ROD	1	STAINLESS STEEL
8	SPACING BOLT	1	TOOL STEEL
9	WASHER	1	MILD STEEL
10	M18 NUT	1	MILD STEEL
11	M8 BOLT	2	MILD STEEL
12	M12 BOLT	4	MILD STEEL

WEST COAST MANUFACTURING
17 MAIN ROAD
VELDDRIFT
7365
www.wce.co.za

TITLE
STEAM VALVE ASSEMBLY

ALL DIMENSIONS ARE IN MILLIMETRES.
ALL UNSPECIFIED RADII ARE R3.

STAPLE

FOR OFFICIAL USE ONLY		
INCORRECT SCALE		
INCORRECT HATCHING		
PARTS NOT ASSEMBLED		
TOTAL PENALTIES (-)		

ASSESSMENT CRITERIA					
SECTIONAL FRONT VIEW					
		POSSIBLE	OBTAINED	SIGN	MODERATED
1	VALVE BASE	$16\frac{1}{2}$			
2	VALVE CAPS	$8\frac{1}{2}$			
3	SPRING	$1\frac{1}{2}$			
4	CONNECTING ROD	$8\frac{1}{2}$			
5	FILLER PIECE	15			
6	SPLIT PIECE	11			
7	SPACING BOLT	8			
8	HAND WHEEL	9			
9	WASHER	2			
10	M18 NUT	5			
SUBTOTAL		**85**			
GENERAL					
1	CENTRE LINES	3			
2	ASSEMBLY	10			
SUBTOTAL		**13**			
TOTAL		**98**			
TOTAL PENALTIES(-)					
GRAND TOTAL					
EXAMINATION NUMBER					
EXAMINATION NUMBER					6

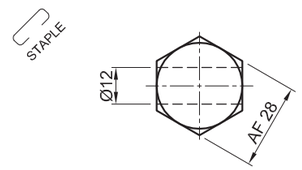

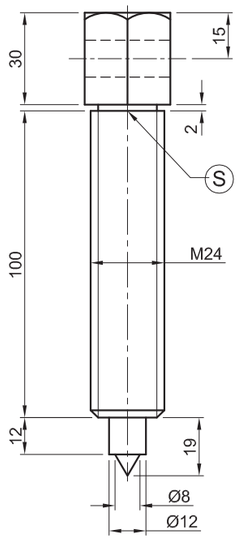

WORM SCREW [1]

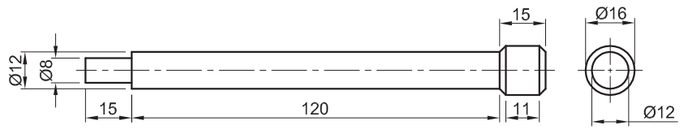

LEVER [2]

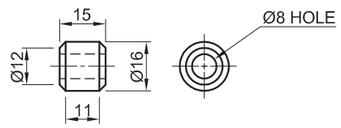

END RING [3]

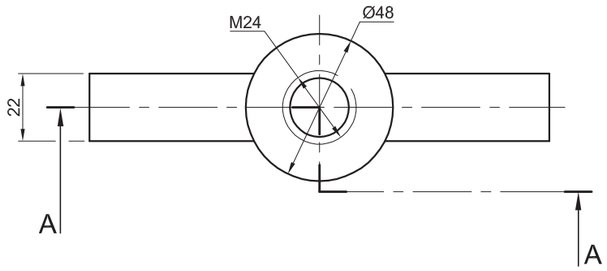

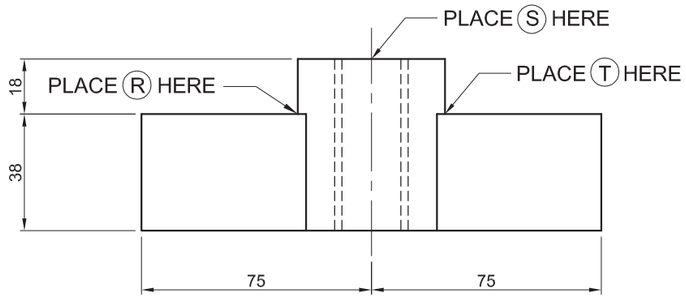

BEAM [4]

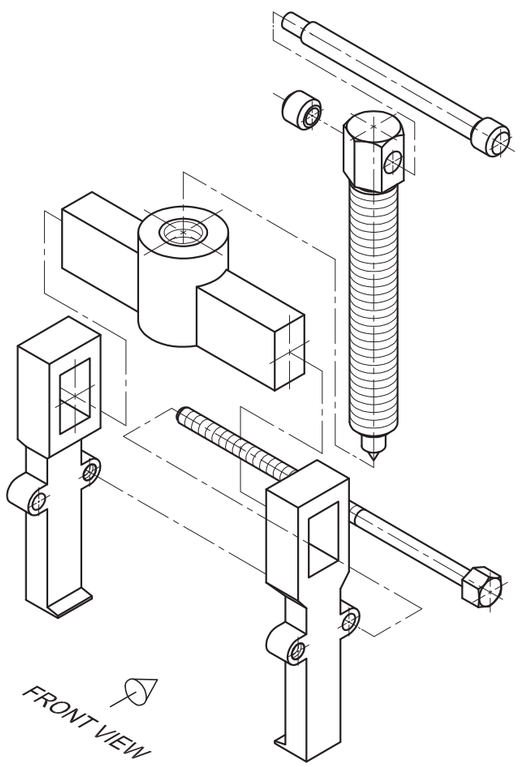

EXPLODED ISOMETRIC DRAWING

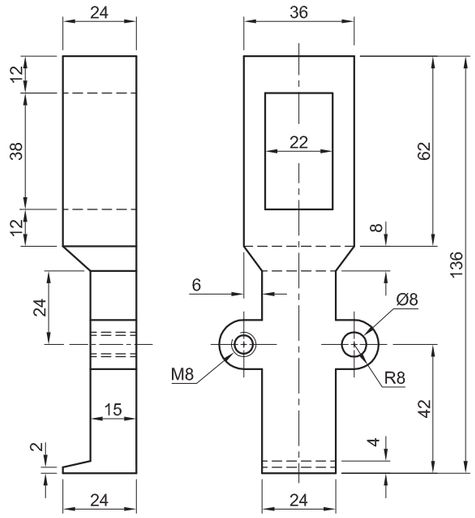

STRONG ARM [5]

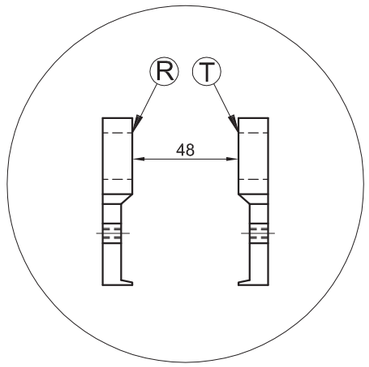

PLACEMENT OF STRONG ARMS

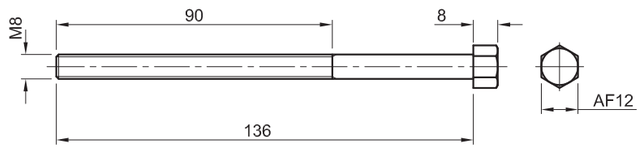

M8 BOLT [6]

QUESTION 4: MECHANICAL ASSEMBLY

Given:

- The exploded isometric drawing of the parts of a bearing puller assembly, showing the position of each part relative to all the others
- Orthographic views of each of the parts of the bearing puller assembly

Instructions:

- Answer this question on page 6.
- Draw, to scale 1 : 1 and in third-angle orthographic projection, the following views of the assembled parts of the bearing puller assembly:
  - **4.1 A half sectional front view** according to cutting plane A-A. Show the left side in section, as seen from the direction of the arrow shown on the exploded isometric drawing. The cutting plane is shown on the top view of the beam (part 4).
  - **4.2 The top view.**
- ALL drawings must comply with the guidelines as contained in the *SANS 10111.*

NOTE:

- The two strong arms (part 5) must be placed against the cylindrical part of the beam (part 4) so that points R and T will be at the indicated positions.
- The worm screw (part 1) must be completely screwed into the beam (part 4) so that point S will be at the indicated position.
- The lever (part 2) must be placed in the centre of the worm screw (part 1).
- Draw only the rear M8 bolt, as indicated by the exploded isometric drawing.
- Show THREE faces of the head of the M8 bolt in the front view.
- Add the cutting plane A-A to the drawing
- NO hidden detail is required. **[96]**

PARTS LIST

	PARTS	QUANTITY	MATERIAL
1	WORM SCREW	1	HARDENED STEEL
2	LEVER	1	HARDENED STEEL
3	END RING	1	MILD STEEL
4	BEAM	1	HARDENED STEEL
5	STRONG ARM	2	HARDENED STEEL
6	M8 BOLT	2	MILD STEEL

WR
SN KING CC
8 VON WHEILIG STREET
ALIES PARK 1791
www.sn_king.co.za
☎ 069 313 1574

BEARING PULLER

ALL DIMENSIONS ARE IN MILLIMETRES.

STAPLE

FOR OFFICIAL USE ONLY		
NOT IN THIRD ANGLE		
INCORRECT OVERALL SCALE		
INCORRECT HATCHING		
PARTS NOT ASSEMBLED		
PARTS DRAWN FREEHAND		
TOTAL PENALTIES (-)		

ASSESSMENT CRITERIA					
TOP VIEW					
		POSSIBLE	OBTAINED	SIGN	MODERATED
1	WORM SCREW	$3\frac{1}{2}$			
2	LEVER	4			
3	END RING	3			
4	BEAM	$4\frac{1}{2}$			
5	STRONG ARM	10			
6	M8 BOLT	7			
	SUBTOTAL	**32**			
SECTIONAL FRONT VIEW					
1	WORM SCREW	15			
2	LEVER	7			
3	END RING	3			
4	BEAM	$5\frac{1}{2}$			
5	STRONG ARM	$10\frac{1}{2}$			
6	M8 BOLT	9			
	SUBTOTAL	**50**			
GENERAL					
1	CENTRE LINES	3			
2	ASSEMBLY	6			
3	CUTTING PLANE	5			
	SUBTOTAL	**14**			
	TOTAL	**96**			
TOTAL PENALTIES(-)					
	GRAND TOTAL				

EXAMINATION NUMBER

EXAMINATION NUMBER 6

BASIC-EDUCATION

STAPLE

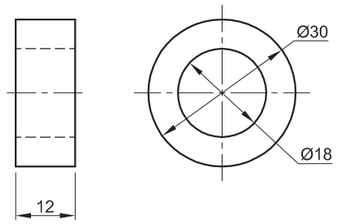

SEAL [2]

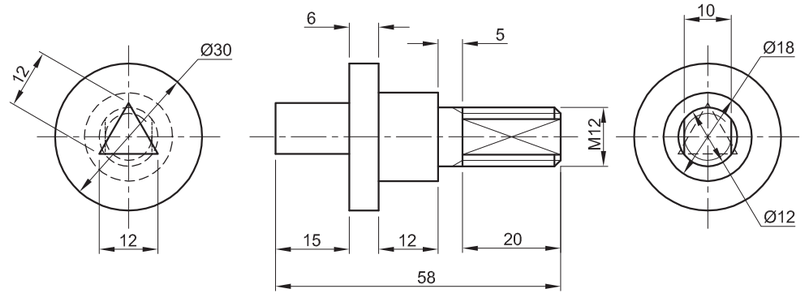

SHAFT [1]

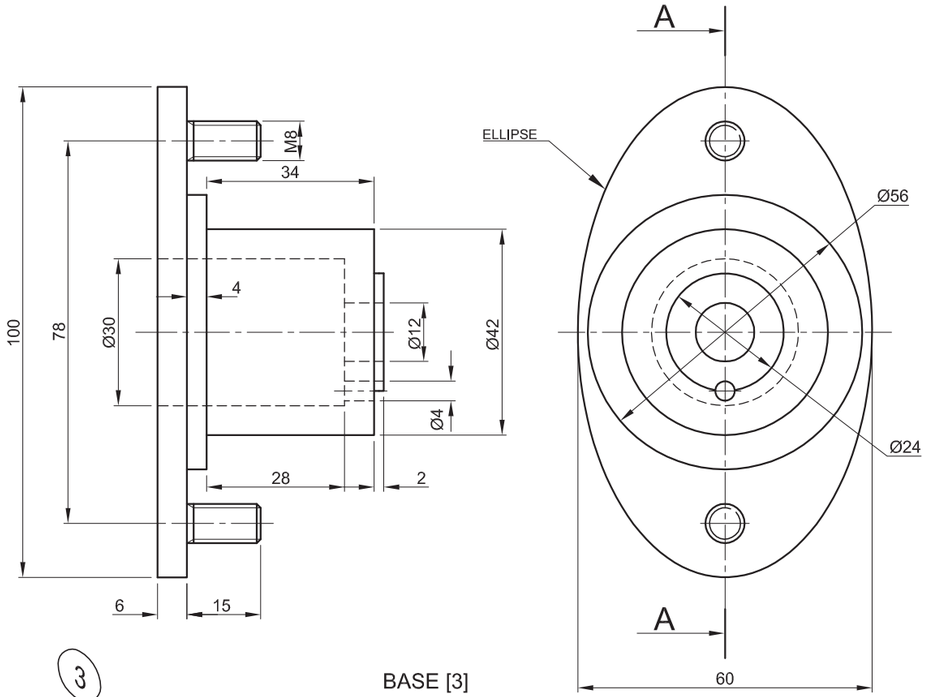

BASE [3]

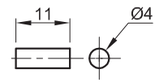

GUIDE PIN [4]

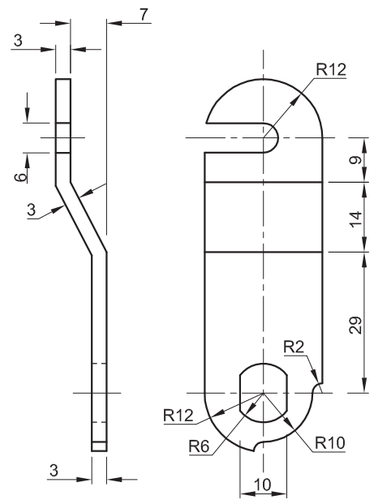

LOCKING LEVER [5]

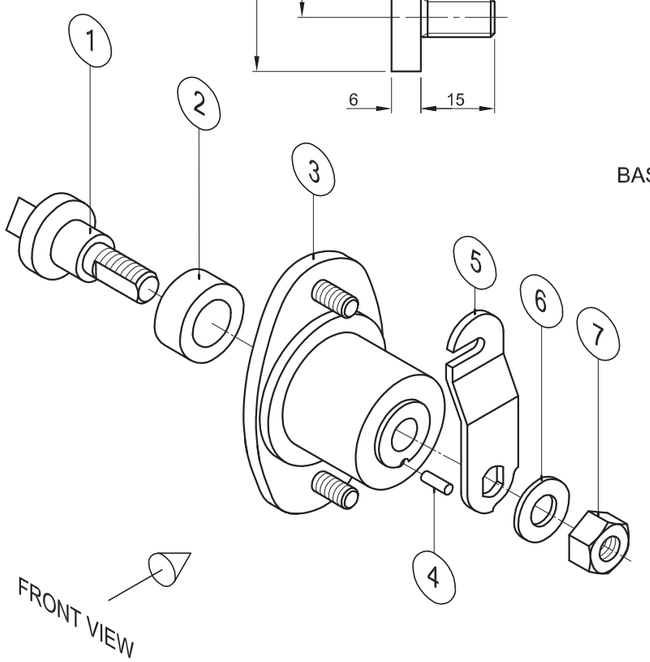

EXPLODED ISOMETRIC DRAWING

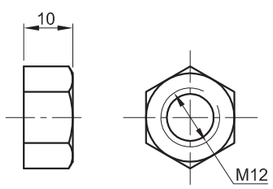

M12 NUT [7]

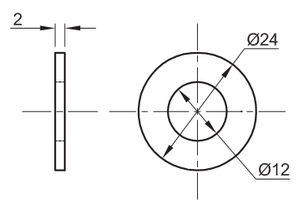

WASHER [6]

QUESTION 4: MECHANICAL ASSEMBLY

Given:

- The exploded isometric drawing of the parts of a distribution box lock assembly, showing the position of each part relative to all the others
- Orthographic views of each of the parts of the distribution box lock assembly

Instructions:

- Answer this question on page 6.
- Draw, to scale 2 : 1 and in third-angle orthographic projection, the following views of the assembled parts of the distribution box lock assembly:
  - **4.1 A sectional front view** on cutting plane A-A, as seen from the direction of the arrow shown on the exploded isometric drawing. The cutting plane, which passes vertically through the centre of the assembly, is shown on the right view of the base (part 3).
  - **4.2 The right view**
- ALL drawing must comply with the guidelines contained in the *SANS 10111.*

NOTE:

- Show THREE faces and ALL necessary construction of the M12 nut.
- Show ALL necessary construction of the ellipse.
- Show ALL necessary construction of the triangle.
- Add cutting plane A-A to the drawing.
- NO hidden detail is required. **[94]**

PARTS LIST

	PART	QUANTITY	MATERIAL
1	SHAFT	1	STAINLESS STEEL
2	SEAL	1	RUBBER
3	BASE	1	CAST IRON
4	GUIDE PIN	1	MILD STEEL
5	LOCKING LEVER	1	MILD STEEL
6	WASHER	1	MILD STEEL
7	M12 NUT	1	MILD STEEL

JPW ENGINEERING CC

123 STRUBEN STREET
PRETORIA
0001
www.jpwengineering.co.za
☎ 012 345 6789

DISTRIBUTION BOX LOCK

ALL DIMENSIONS ARE IN MILLIMETRES

ALL UNSPECIFIED RADII ARE R3.

STAPLE

PENALTIES		
NOT IN THIRD ANGLE		
INCORRECT OVERALL SCALE		
INCORRECT HATCHING		
TOTAL PENALTIES (-)		

ASSESSMENT CRITERIA					
SECTIONAL FRONT VIEW					
		POSSIBLE	OBTAINED	SIGN	MODERATED
1	SHAFT	$17\frac{1}{2}$			
2	SEAL	2			
3	BASE	$18\frac{1}{2}$			
4	GUIDE PIN	$2\frac{1}{2}$			
5	LOCKING LEVER	7			
6	WASHER	$2\frac{1}{2}$			
7	M12 NUT	$6\frac{1}{2}$			
SUBTOTAL		$56\frac{1}{2}$			
RIGHT VIEW					
1	SHAFT	5			
2	M12 NUT	4			
3	WASHER	1			
4	LOCKING LEVER	$4\frac{1}{2}$			
5	BASE	9			
6	GUIDE PIN	1			
7	CUTTING PLANE	3			
SUBTOTAL		$27\frac{1}{2}$			
GENERAL					
1	CENTRE LINES	4			
2	ASSEMBLY	6			
SUBTOTAL		10			
TOTAL		94			
TOTAL PENALTIES (-)					
FINAL TOTAL					
EXAMINATION NUMBER					
EXAMINATION NUMBER					6

BASIC-EDUCATION

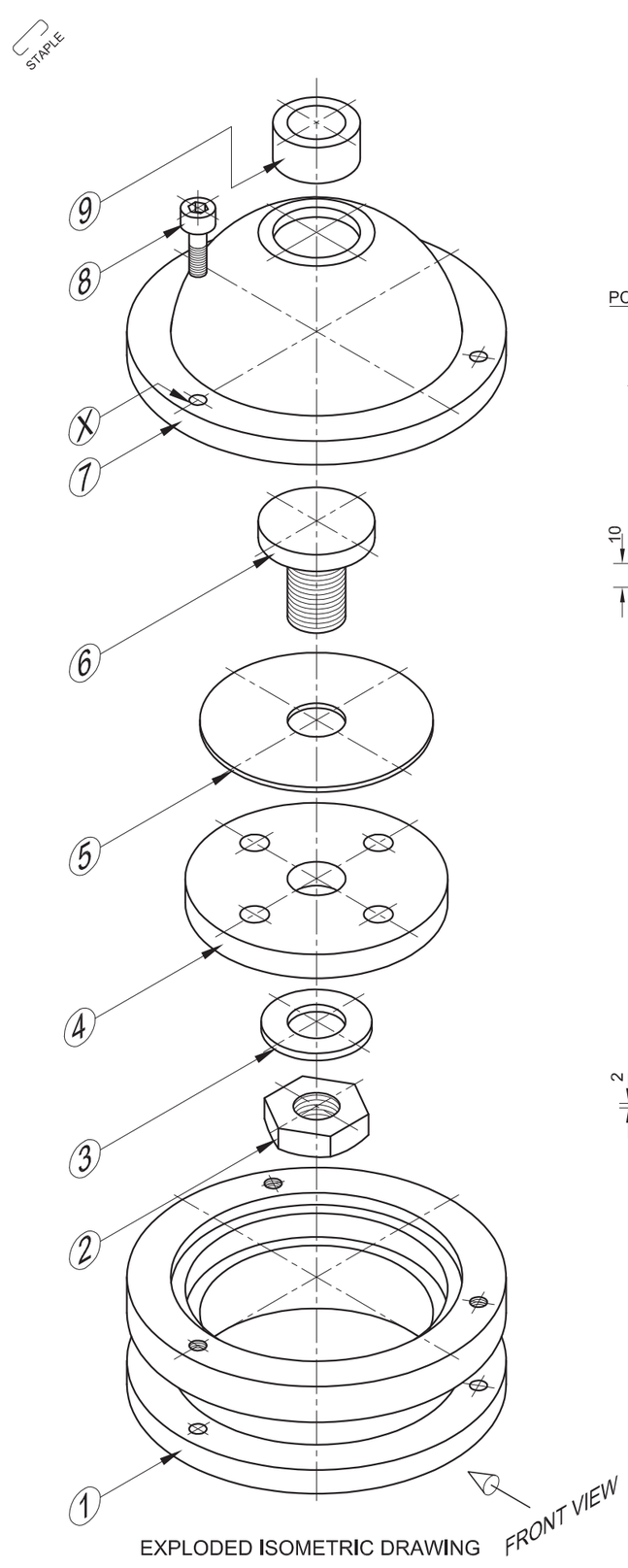

EXPLODED ISOMETRIC DRAWING

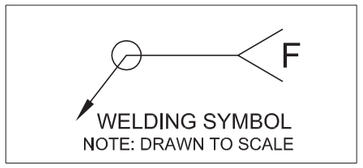

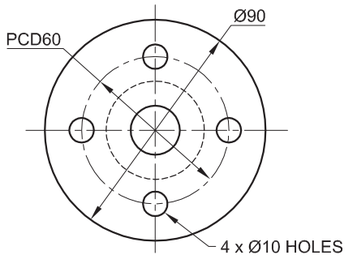

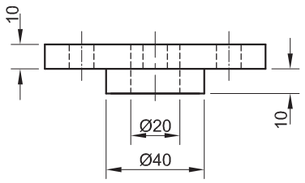

VALVE PLATE [4]

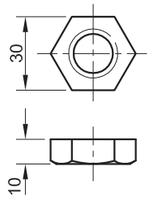

M20 NUT [2]

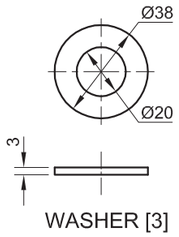

WASHER [3]

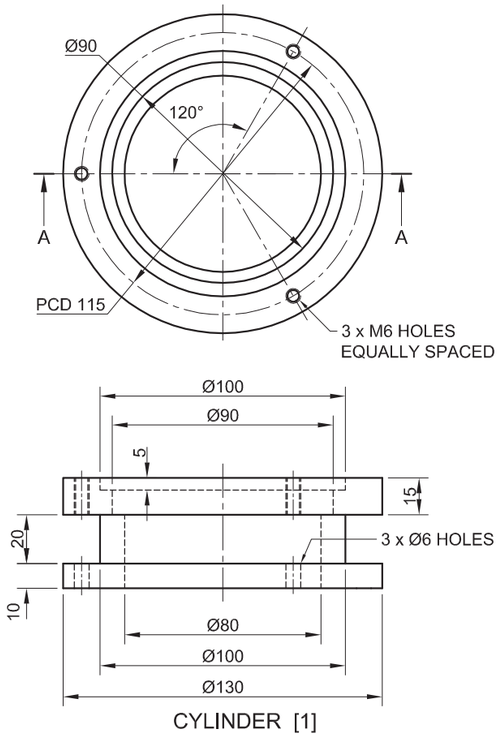

CYLINDER [1]

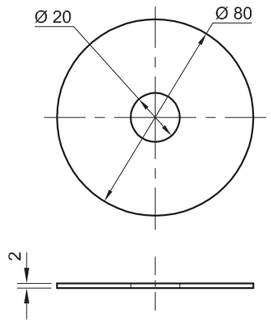

DIAPHRAGM [5]

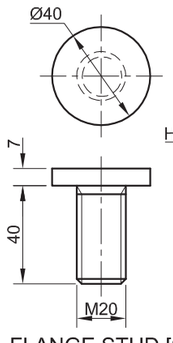

FLANGE STUD [6]

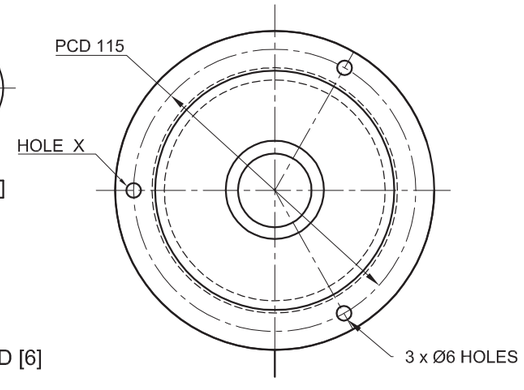

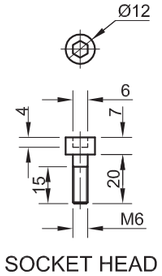

SOCKET HEAD BOLT [8]

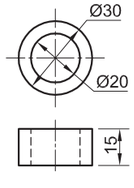

OUTLET PIPE [9]

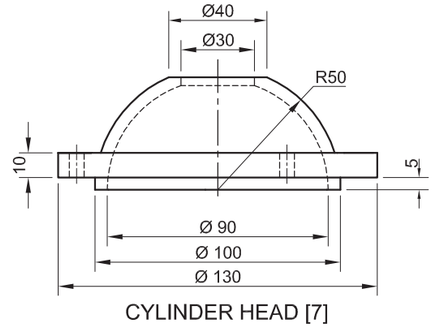

CYLINDER HEAD [7]

QUESTION 4: MECHANICAL ASSEMBLY

Given:

- The exploded isometric drawing of the parts of a one-way valve assembly, showing the position of each part relative to all the others
- Orthographic views of each of the parts of the one-way valve assembly

Instructions:

- Answer this question on page 6.
- Draw, to scale 1 : 1 and in third-angle orthographic projection, the following views of the assembled parts of the one-way valve assembly:
  - **4.1 A sectional front view** on cutting plane A-A, as seen from the direction of the arrow shown on the exploded isometric drawing. The cutting plane, which passes vertically through the centre of the assembly, is shown on the top view of the cylinder (part 1).
  - **4.2 The top view**
  - **4.3 The left view**
- ALL drawings must comply with the guidelines contained in the *SANS 10111.*

NOTE:

- Proper planning is essential.
- Draw only ONE socket head bolt in the hole marked X.
- The outlet pipe (part 9) fits into the cylinder head (part 7) and must be welded in place. Show the given welding symbol on the left view.
- Show THREE faces and ALL the necessary construction for the M20 nut.
- Show TWO faces of the inside of the socket head bolt.
- Add cutting plane A-A to the drawing.
- NO hidden detail is required. **[95]**

PARTS LIST

	PART	QUANTITY	MATERIAL
1	CYLINDER	1	CAST IRON
2	M20 NUT	1	STAINLESS STEEL
3	WASHER	1	STAINLESS STEEL
4	VALVE PLATE	1	CAST IRON
5	DIAPHRAGM	1	RUBBER
6	FLANGE STUD	1	STAINLESS STEEL
7	CYLINDER HEAD	1	CAST IRON
8	SOCKET HEAD BOLT	3	STAINLESS STEEL
9	OUTLET PIPE	1	STAINLESS STEEL

JPW ENGINEERING CC
123 STRUBEN STREET
PRETORIA
0001
www.jpwengineering.co.za
☎ 012 345 6789

ONE-WAY VALVE

ALL DIMENSIONS ARE IN MILLIMETRES.

ALL UNSPECIFIED RADII ARE R4.

STAPLE

PENALTIES		
THIRD-ANGLE (TA)		
INCORRECT SCALE (IS)		
NUT CONSTRUCTION (NC)		
HATCHING (H)		
TOTAL		

Carry the TOTAL over to the penalties row under GENERAL.

ASSESSMENT CRITERIA					
SECTIONAL FRONT VIEW					
		POSSIBLE	OBTAINED	SIGN	MODERATED
1	CYLINDER	12			
2	M20 NUT	6			
3	WASHER	2			
4	VALVE PLATE	$9\frac{1}{2}$			
5	DIAPHRAGM	$2\frac{1}{2}$			
6	FLANGE STUD	$6\frac{1}{2}$			
7	CYLINDER HEAD	$9\frac{1}{2}$			
8	SOCKET HEAD BOLT	8			
9	OUTLET PIPE	4			
SUBTOTAL		60			
TOP VIEW					
1	CYLINDER HEAD	$3\frac{1}{2}$			
2	SOCKET HEAD BOLT	$1\frac{1}{2}$			
3	OUTLET PIPE	1			
SUBTOTAL		6			
LEFT VIEW					
1	CYLINDER	4			
2	CYLINDER HEAD	3			
3	SOCKET HEAD BOLT	$1\frac{1}{2}$			
4	OUTLET PIPE	$1\frac{1}{2}$			
5	WELDING SYMBOL	2			
6	CUTTING PLANE	3			
SUBTOTAL		15			
GENERAL					
1	CENTRE LINES	6			
2	ASSEMBLY	8			
SUBTOTAL		14			
PENALTIES (-)					
TOTAL		95			

EXAMINATION NUMBER	
EXAMINATION NUMBER	6

BASIC-EDUCATION

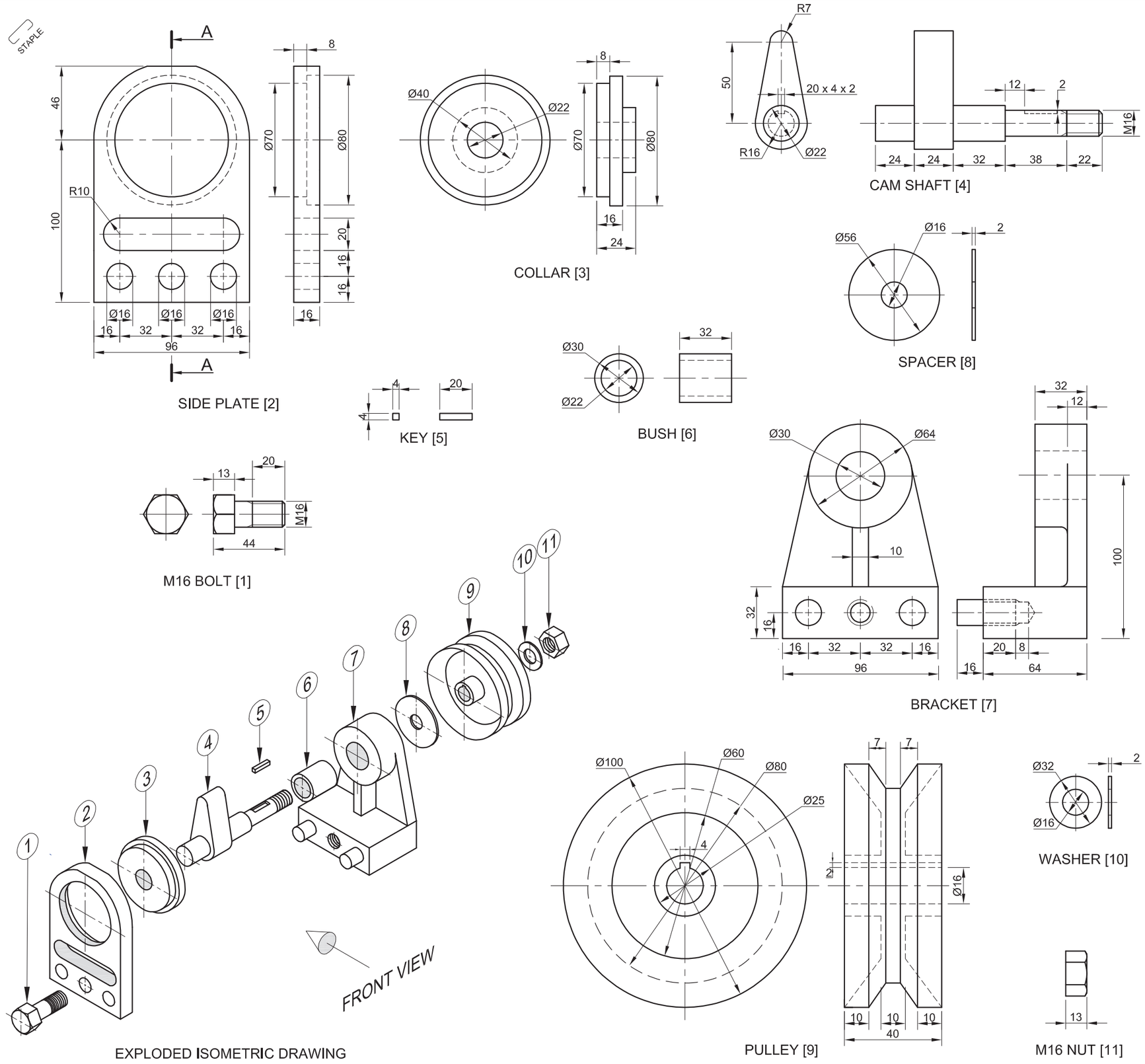

QUESTION 4: MECHANICAL ASSEMBLY

Given:

- The exploded isometric drawing of the parts of a cam-pulley assembly, showing the position of each part relative to all the others
- Orthographic views of each of the parts of the cam-pulley assembly

Instructions:

- Answer this question on page 6.
- Draw, to scale 1 : 1 and in third-angle orthographic projection, the following views of the assembled parts of the cam-pulley assembly:
  - 4.1 **A sectional front view** on cutting plane A-A, as seen from the direction of the arrow shown on the exploded isometric drawing. The cutting plane, which passes vertically through the centre of the assembly, is shown on the left view of the side plate (part 2).
  - 4.2 **The left view**
- ALL drawing must comply with the guidelines contained in the *SANS 10111.*

NOTE:

- Show THREE faces and ALL the necessary construction of the M16 nut in the front view.
- Show TWO faces and ALL the necessary construction of the M16 bolt head in the front view.
- Insert cutting plane A-A.
- NO hidden detail is required. **[95]**

PARTS LIST

	PART	QUANTITY	MATERIAL
1.	M16 BOLT	1	MILD STEEL
2.	SIDE PLATE	1	CAST IRON
3.	COLLAR	1	MILD STEEL
4.	CAM SHAFT	1	MILD STEEL
5.	KEY	1	BRASS
6.	BUSH	1	CAST IRON
7.	BRACKET	1	MILD STEEL
8.	SPACER	1	MILD STEEL
9.	PULLEY	1	CAST IRON
10.	WASHER	1	MILD STEEL
11.	M16 NUT	1	MILD STEEL

JPW ENGINEERING CC
123 STRUBEN STREET
PRETORIA
0001
www.jpwengineering.co.za
☎ 012 345 6789

CAM-PULLEY

ALL DIMENSIONS ARE IN MILLIMETRES.

ALL UNSPECIFIED RADII ARE R4

5

STAPLE

ASSESSMENT CRITERIA					
SECTIONAL FRONT VIEW					
1	BRACKET	$7\frac{1}{2}$			
2	SIDE PLATE	4			
3	CAM SHAFT	10			
4	BELT PULLEY	$13\frac{1}{2}$			
5	COLLAR	$3\frac{1}{2}$			
6	M16 NUT	5			
7	M16 BOLT	8			
8	BUSH	2			
9	SPACER	1			
10	KEY	$1\frac{1}{2}$			
11	WASHER	1			
H	HATCHING	$13\frac{1}{2}$			
SUBTOTAL		$70\frac{1}{2}$			
LEFT VIEW					
1	SIDE PLATE	5			
2	BRACKET	2			
3	COLLAR	$\frac{1}{2}$			
4	BOLT	1			
5	CAM SHAFT	2			
6	PULLEY	1			
SUBTOTAL		$11\frac{1}{2}$			
GENERAL					
1	CENTRE LINES	8			
2	ASSEMBLY	5			
SUBTOTAL		**13**			
PENALTIES (-)					
TOTAL		**95**			
EXAMINATION NUMBER					
EXAMINATION NUMBER					6

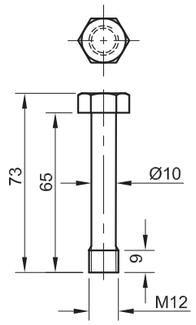

M12 BOLT [1]

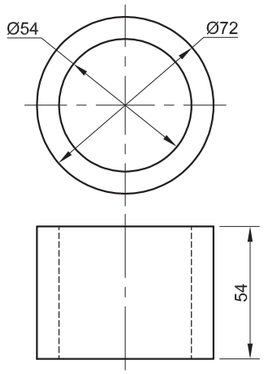

CYLINDER [4]

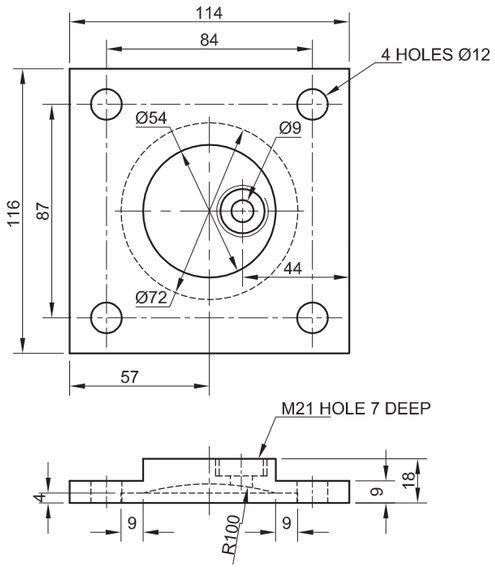

CYLINDER HEAD [3]

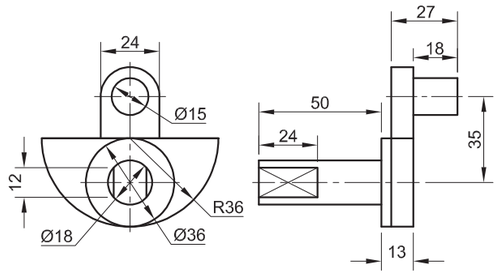

CRANK SHAFT [7]

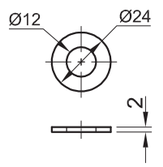

WASHER [2]

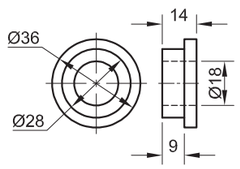

BUSH [6]

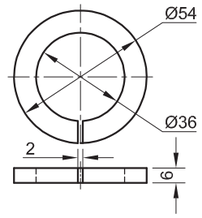

PISTON RING [8]

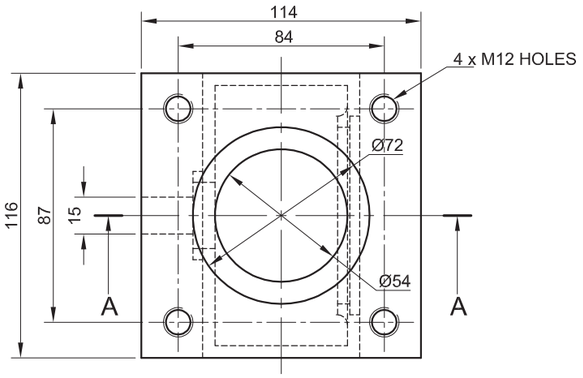

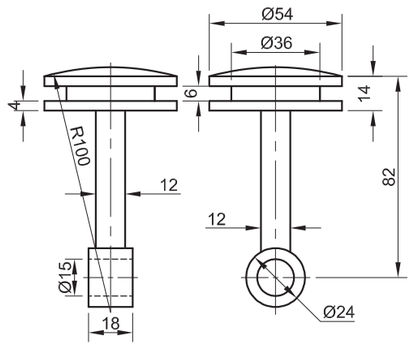

PISTON [9]

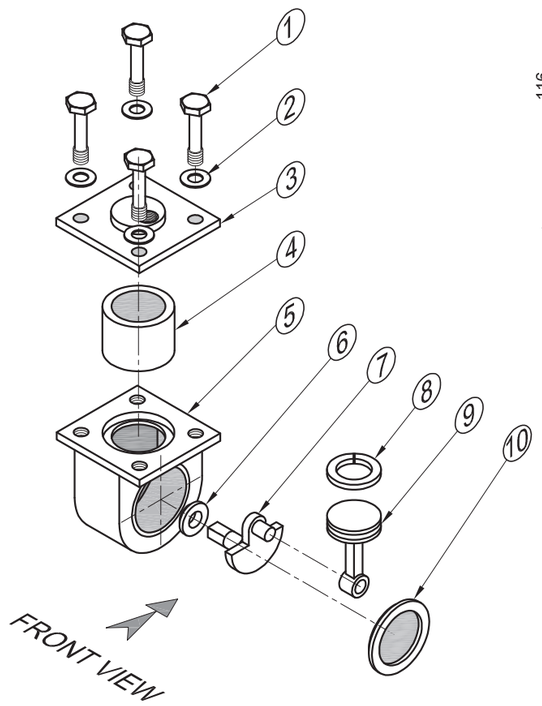

EXPLODED ISOMETRIC DRAWING

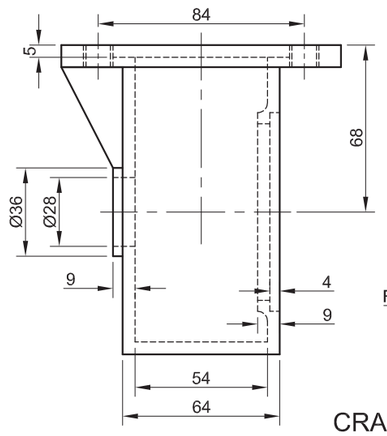

CRANK CASE [5]

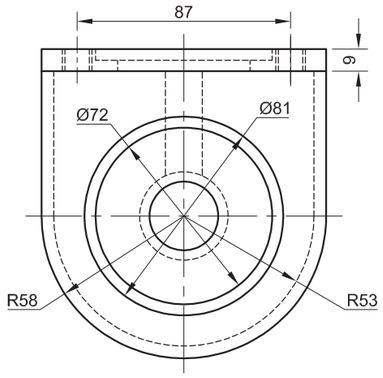

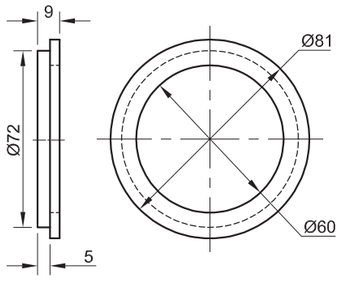

CRANK CASE COVER [10]

QUESTION 4: MECHANICAL ASSEMBLY

Given:

- The exploded isometric drawing of the parts of an air pump assembly, showing the position of each part relative to all the others
- Orthographic views of each of the parts of the air pump assembly

Instructions:

- Answer this question on page 6.
- Draw, to scale 1 : 1 and in third-angle orthographic projection, the following view of the assembled parts of the air pump assembly:
  A sectional front view on cutting plane A-A, as seen from the direction of the arrow shown on the exploded isometric drawing. The cutting plane, which passes through the vertical centre of the assembly, is shown on the top view of the crank case (part 5).
- ALL drawings must comply with the guidelines contained in the *SANS 10111.*

NOTE:

- Show THREE faces of the M12 bolt on the left of the assembly.
- Show TWO faces of the M12 bolt on the right of the assembly.
- Show ALL necessary construction for the bolts. NO stencils may be used.
- NO hidden detail is required. **[93]**

PARTS LIST

PART	QUANTITY	MATERIAL
1. BOLT	4	HARDENED STEEL
2. WASHER	4	MILD STEEL
3. CYLINDER HEAD	1	CAST IRON
4. CYLINDER	1	HARDENED STEEL
5. CRANK CASE	1	CAST IRON
6. BUSH	1	BRONZE
7. CRANK SHAFT	1	HARDENED STEEL
8. PISTON RING	1	HARDENED STEEL
9. PISTON	1	ALUMINIUM
10. CRANK CASE COVER	1	MILD STEEL

TITLE

AIR PUMP

DYNAMIC ENGINEERING

1051 BRAKEN ROAD
LITTLE FALLS
GAUTENG
1735
011 355 1550

ALL DIMENSIONS ARE IN MILLIMETRES.

ALL UNSPECIFIED RADII ARE R4.

STAPLE

ASSESSMENT CRITERIA					
SECTIONAL FRONT VIEW					
		POSSIBLE	OBTAINED	SIGN	MODERATED
1	M12 BOLT + WASHER	15			
2	CYLINDER HEAD	9			
3	CYLINDER	5			
4	CRANK CASE	13			
5	BUSH	3			
6	CRANK SHAFT	9			
7	PISTON RING	1			
8	PISTON	6			
9	CRANK CASE COVER	5			
H	HATCHING	15			
SUBTOTAL		81			
GENERAL					
1	CENTRE LINES	3			
2	ASSEMBLY	9			
SUBTOTAL		12			
TOTAL		93			
EXAMINATION NUMBER					
EXAMINATION NUMBER					6

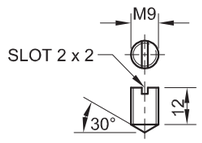

GRUB SCREW [6]

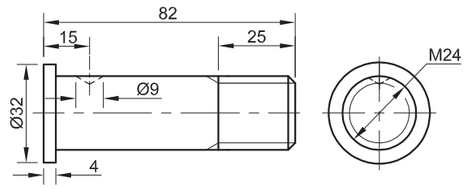

SHAFT [7]

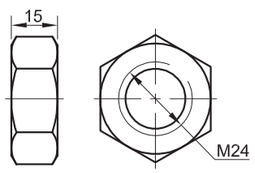

M24 NUT [1]

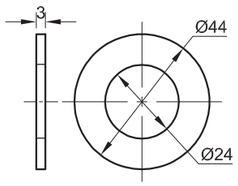

WASHER [2]

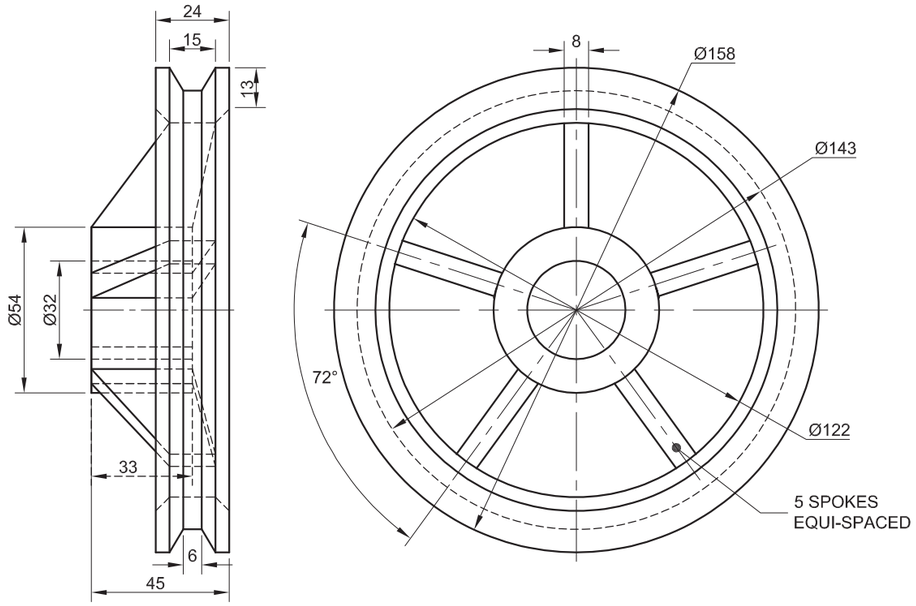

PULLEY [3]

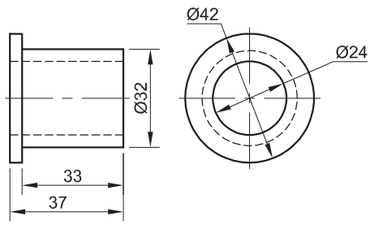

BUSH [4]

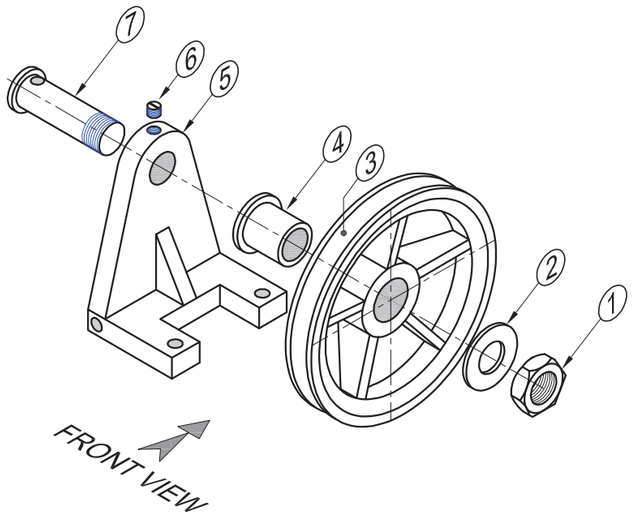

EXPLODED ISOMETRIC DRAWING

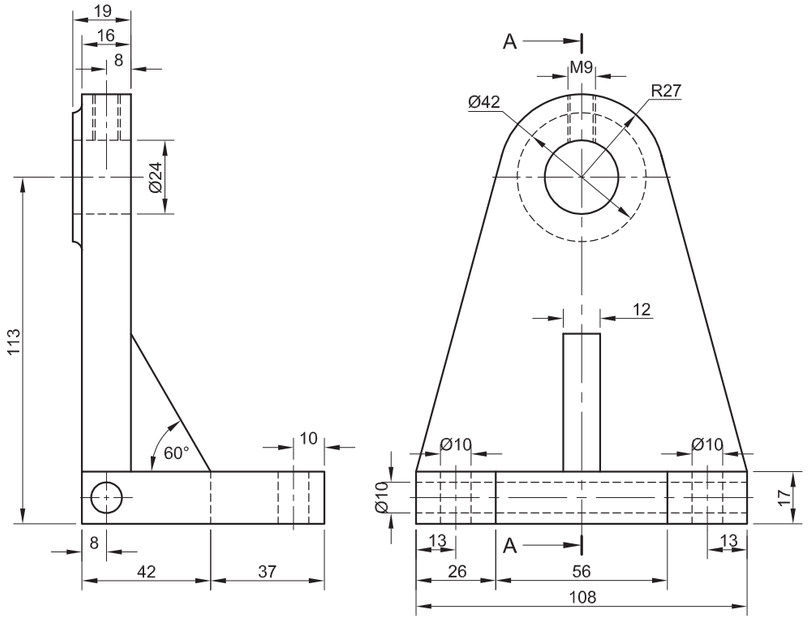

BRACKET [5]

QUESTION 4: MECHANICAL ASSEMBLY

Given:

- The exploded isometric drawing of the parts of a pulley assembly, showing the position of each part relative to all the others
- Orthographic views of each of the parts of the pulley assembly

Instructions:

- Answer this question on page 6.
- Draw, to scale 1 : 1 and in third-angle orthographic projection, the following views of the assembled parts of the pulley assembly:
  - **4.1 A sectional front view** on cutting plane A-A, as seen from the direction of the arrow shown on the exploded isometric drawing. The cutting plane, which passes through the vertical centre line of the assembly, is shown on the right view of the bracket (part 5).
  - **4.2 The right view**
- ALL drawings must comply with the guidelines contained in the *SANS 10111*.

NOTE:

- Show THREE faces of the M24 nut and ALL necessary construction. You may not use a stencil.
- NO hidden detail is required.

Add the following features to the drawing:

- The cutting plane A-A
- Label the sectional view SECTION A-A. **[95]**

PARTS LIST

PART	QUANTITY	MATERIAL
1. M24 NUT	1	MILD STEEL
2. WASHER	1	MILD STEEL
3. PULLEY	1	CAST IRON
4. BUSH	1	BRONZE
5. BRACKET	1	CAST IRON
6. GRUB SCREW	1	MILD STEEL
7. SHAFT	1	MILD STEEL

TITLE

PULLEY ASSEMBLY

PRECISION ENGINEERING

54 SOMTSEU ROAD
KINGSMEAD
DURBAN
4000
☏ 031 335 1600

ALL DIMENSIONS ARE IN MILLIMETRES.

ALL UNSPECIFIED RADII ARE R3.

STAPLE

ASSESSMENT CRITERIA					
SECTIONAL FRONT VIEW					
		POSSIBLE	OBTAINED	SIGN	MODERATED
1	M24 NUT + WASHER	8½			
2	PULLEY	16			
3	BRACKET	9½			
4	BUSH	3			
5	GRUB SCREW	3			
6	SHAFT	7			
7	HATCHING	10			
SUBTOTAL		57			
RIGHT VIEW					
1	M24 NUT + WASHER	6			
2	PULLEY	8			
3	BRACKET	7½			
SUBTOTAL		21½			
GENERAL					
1	CENTRE LINES	7			
2	CUTTING PLANE + LABEL	3½			
3	ASSEMBLY	6			
SUBTOTAL		16½			
TOTAL		95			
EXAMINATION NUMBER					
EXAMINATION NUMBER					6

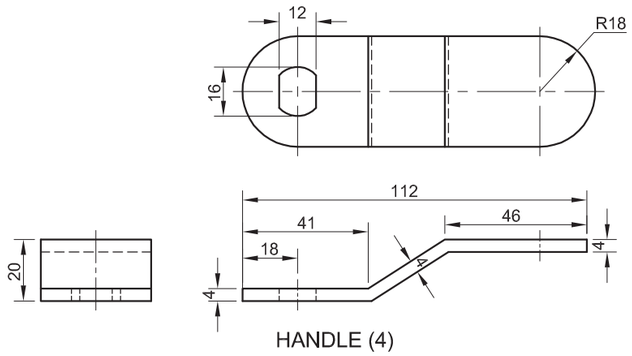

HANDLE (4)

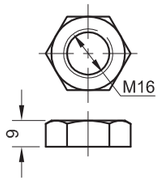

M16 NUT (6)

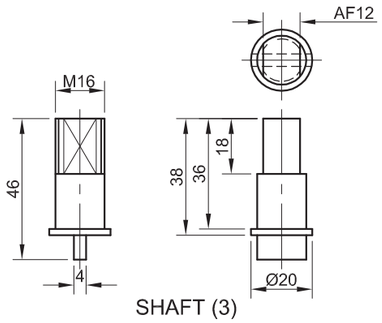

SHAFT (3)

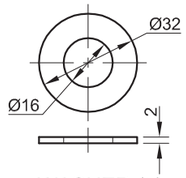

WASHER (5)

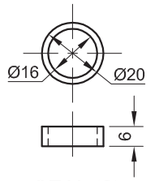

SEAL (2)

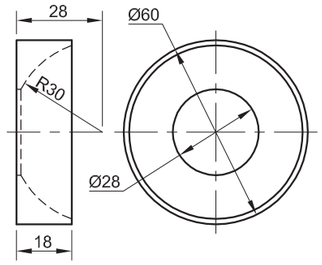

LEFT CUP SEAL (7)

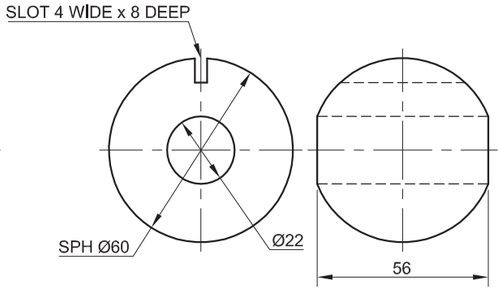

VALVE (8)

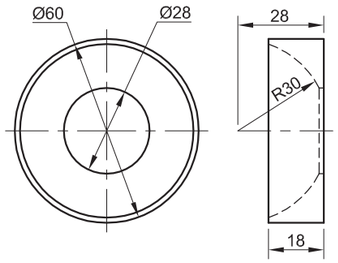

RIGHT CUP SEAL (9)

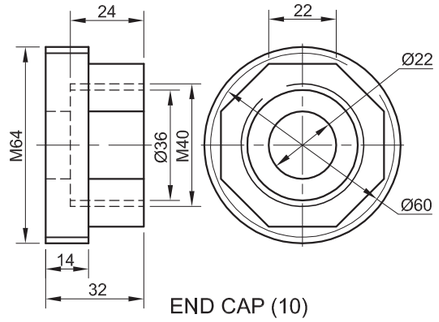

END CAP (10)

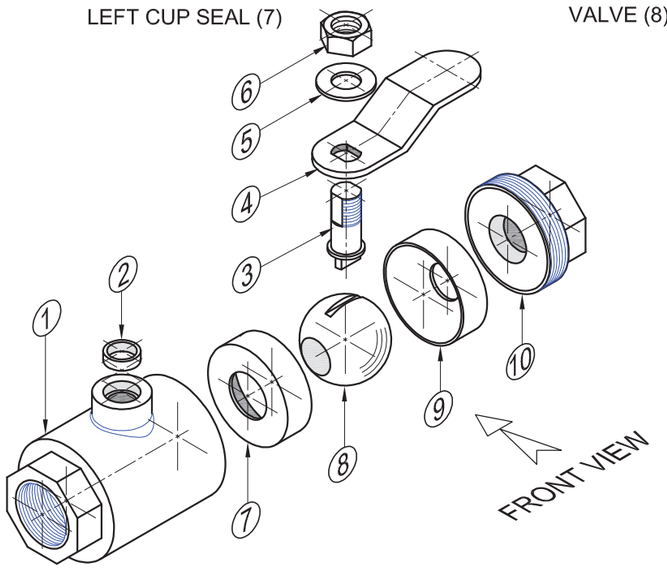

EXPLODED ISOMETRIC DRAWING

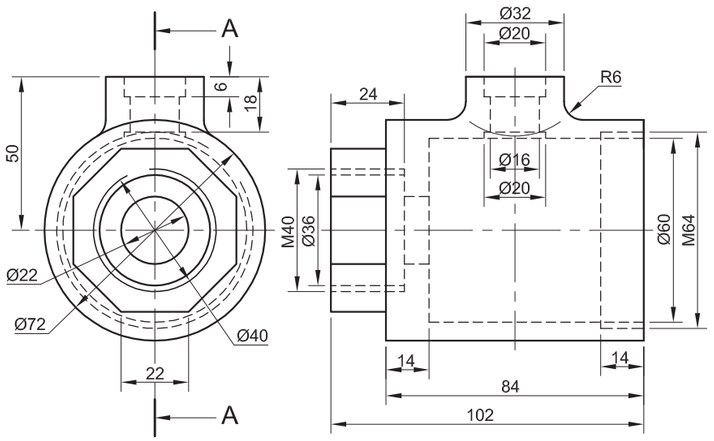

VALVE BODY (1)

QUESTION 4: MECHANICAL ASSEMBLY

Given:

- The exploded isometric drawing of the parts of a stop valve assembly, showing the position of each part relative to all the others
- Orthographic views of each of the parts of the stop valve assembly

Instructions:

- Answer this question on page 6.
- Draw, to scale 1 : 1 and in third-angle orthographic projection, the following views of the assembled parts of the stop valve assembly:
  - **4.1 A sectional front view** on cutting plane A-A, as seen from the direction of the arrow shown on the exploded isometric drawing. The cutting plane, which passes vertically through the centre of the assembly, is shown on the left view of the valve body (part 1).
  - **4.2 The left view**
- ALL drawing must comply with the guidelines contained in the *SABS 0111.*

NOTE:

- Show THREE faces of the nut in the front view and ALL necessary construction.
- NO hidden detail is required. **[93]**

PARTS LIST

PART	QUANTITY	MATERIAL
1. VALVE BODY	1	CAST IRON
2. SEAL	1	FIBRE
3. SHAFT	1	MILD STEEL
4. HANDLE	1	STEEL
5. WASHER	1	MILD STEEL
6. M16 NUT	1	MILD STEEL
7. LEFT CUP SEAL	1	TEFLON
8. VALVE	1	STEEL
9. RIGHT CUP SEAL	1	TEFLON
10. END CAP	1	MILD STEEL

PRECISION
ENGINEERING WORKS
15 DYER STREET
EAST LONDON
www.precision.co.za
☏ 043 645 7820

STOP VALVE

ALL DIMENSIONS ARE IN MILLIMETRES.

ALL UNSPECIFIED RADII ARE R2.

STAPLE

ASSESSMENT CRITERIA					
SECTIONAL FRONT VIEW					
1	VALVE BODY	10			
2	SEAL	2			
3	SHAFT	6			
4	HANDLE	5			
5	WASHER	2			
6	M16 NUT	5			
7	LEFT CUP SEAL	5			
8	VALVE	3			
9	RIGHT CUP SEAL	4			
10	END CAP	7			
H	HATCHING	13			
SUBTOTAL		**62**			
LEFT VIEW					
1	HANDLE	2½			
2	M16 NUT	4			
3	SHAFT	3			
4	WASHER	1½			
5	VALVE BODY	9			
SUBTOTAL		**20**			
GENERAL					
1	CENTRE LINES	2			
2	ASSEMBLY	9			
SUBTOTAL		**11**			
TOTAL		**93**			
EXAMINATION NUMBER					
EXAMINATION NUMBER					6

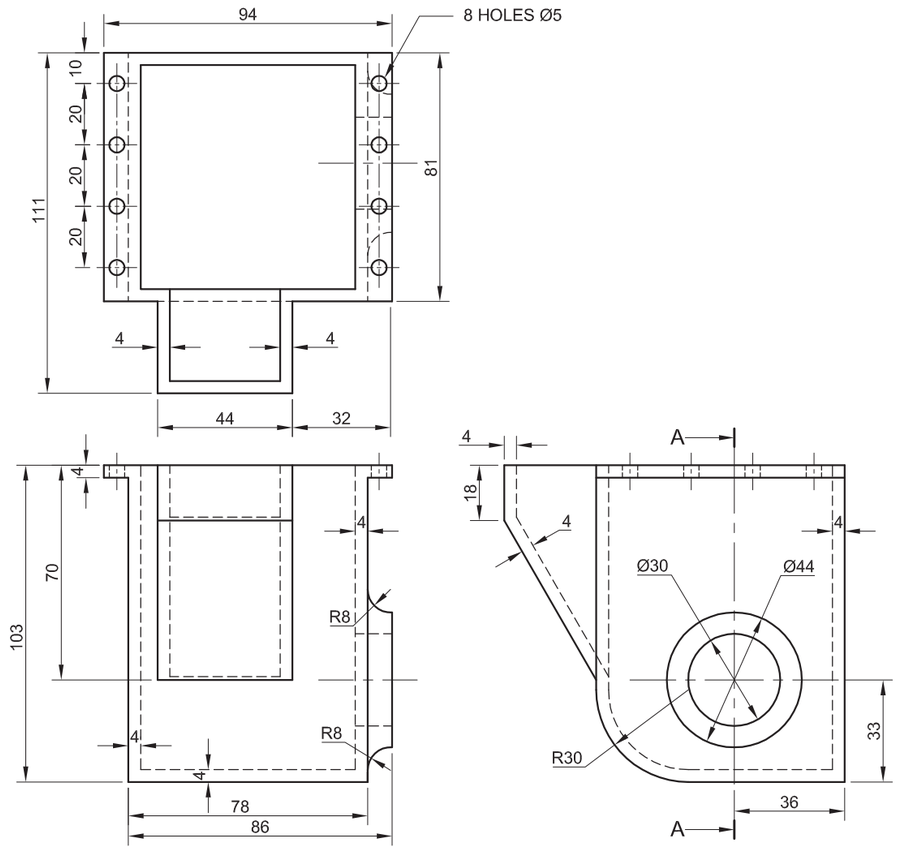

HOUSING (1)

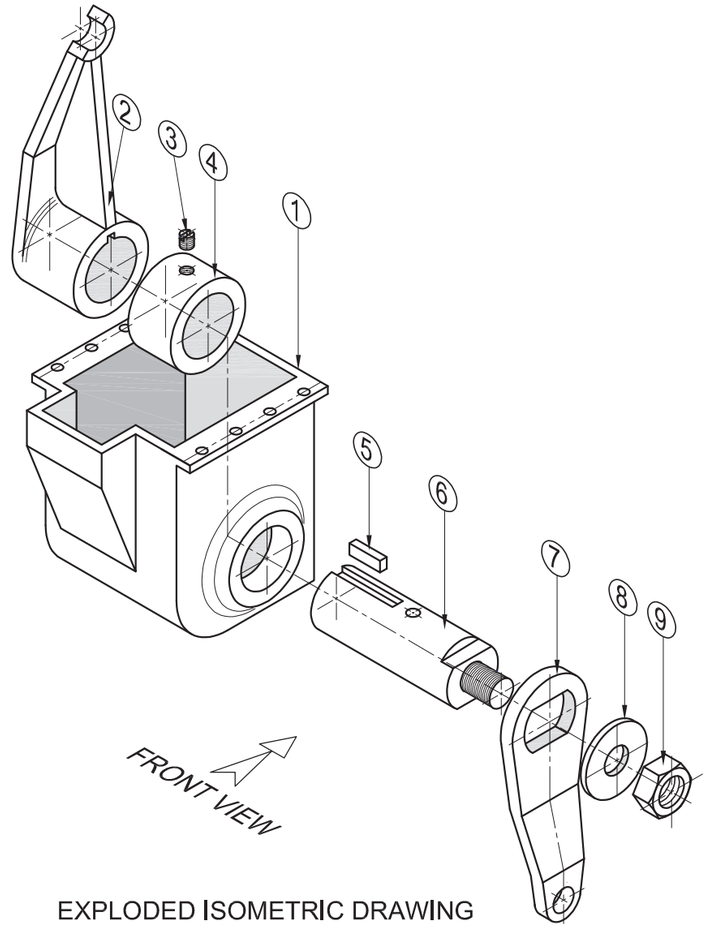

EXPLODED ISOMETRIC DRAWING

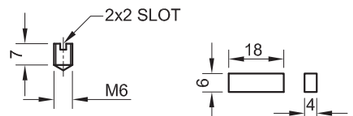

GRUB SCREW (3)

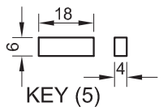

KEY (5)

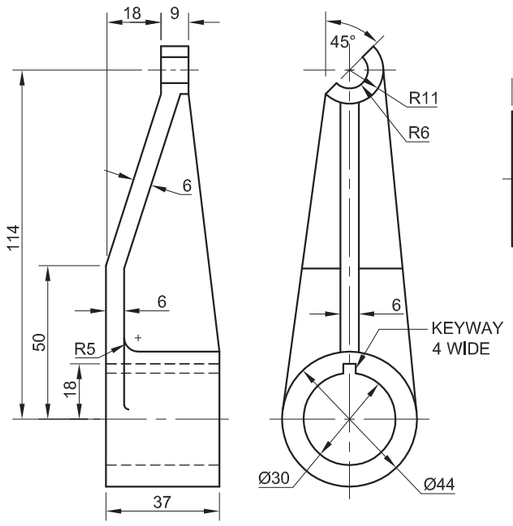

RELEASE ARM (2)

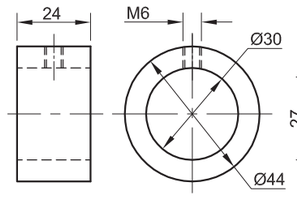

SPACER (4)

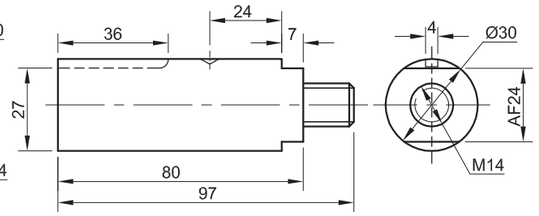

SHAFT (6)

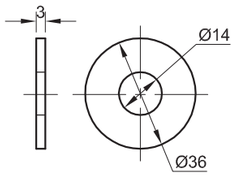

WASHER (8)

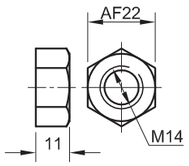

M14 NUT (9)

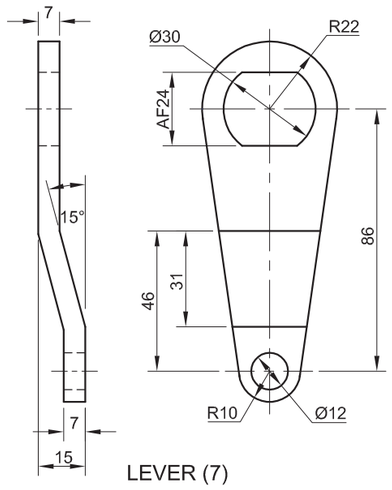

LEVER (7)

QUESTION 4: MECHANICAL ASSEMBLY

Given:

- The exploded isometric drawing of the parts of a clutch release housing assembly, showing the position of each part relative to all the others
- Orthographic views of each of the parts of the clutch release housing assembly

Instructions:

- Answer this question on page 6.
- Draw, to scale 1 : 1 and in third-angle orthographic projection, the following views of the assembled parts of the clutch release housing assembly:
  - **4.1 A sectional front view** on cutting plane A-A, as seen from the direction of the arrow shown on the exploded isometric drawing. The cutting plane, which passes vertically through the centre of the assembly, is shown on the right view of the housing (part 1).
  - **4.2 The right view**
- ALL drawing must comply with the guidelines contained in the *SABS 0111.*

NOTE:

- Show THREE faces of the nut in the front view and ALL necessary construction.
- NO hidden detail is required.

Add the following feature to the drawing:

- The cutting plane A-A **[92]**

PARTS LIST

PART	QUANTITY	MATERIAL
1. HOUSING	1	CAST IRON
2. RELEASE ARM	1	CAST IRON
3. GRUB SCREW	1	MILD STEEL
4. SPACER	1	MILD STEEL
5. KEY	1	MILD STEEL
6. SHAFT	1	MILD STEEL
7. LEVER	1	MILD STEEL
8. WASHER	1	MILD STEEL
9. M14 NUT	1	MILD STEEL

MASTERCAST ENGINEERING

29 BURMAN ROAD
DEALPARTY
PORT ELIZABETH 6025
www.mtech.co.za
☏ 041 545 7820

CLUTCH RELEASE HOUSING

ALL DIMENSIONS ARE IN MILLIMETRES.

ALL UNSPECIFIED RADII ARE R2.

STAPLE

ASSESSMENT CRITERIA					
SECTIONAL FRONT VIEW					
1	HOUSING	9			
2	RELEASE ARM	9½			
3	GRUB SCREW	3			
4	SPACER	3			
5	KEY	2			
6	SHAFT	6½			
7	LEVER	7			
8	WASHER	2			
9	M14 NUT	5			
H	HATCHING	13			
SUBTOTAL		**60**			
RIGHT VIEW					
1	HOUSING	5			
2	RELEASE ARM	4			
3	LEVER	4			
4	WASHER + M14 NUT	4			
SUBTOTAL		**17**			
GENERAL					
1	CENTRE LINES	4			
2	CUTTING PLANE	3			
3	ASSEMBLY	8			
SUBTOTAL		**15**			
TOTAL		**92**			
EXAMINATION NUMBER					
EXAMINATION NUMBER					6

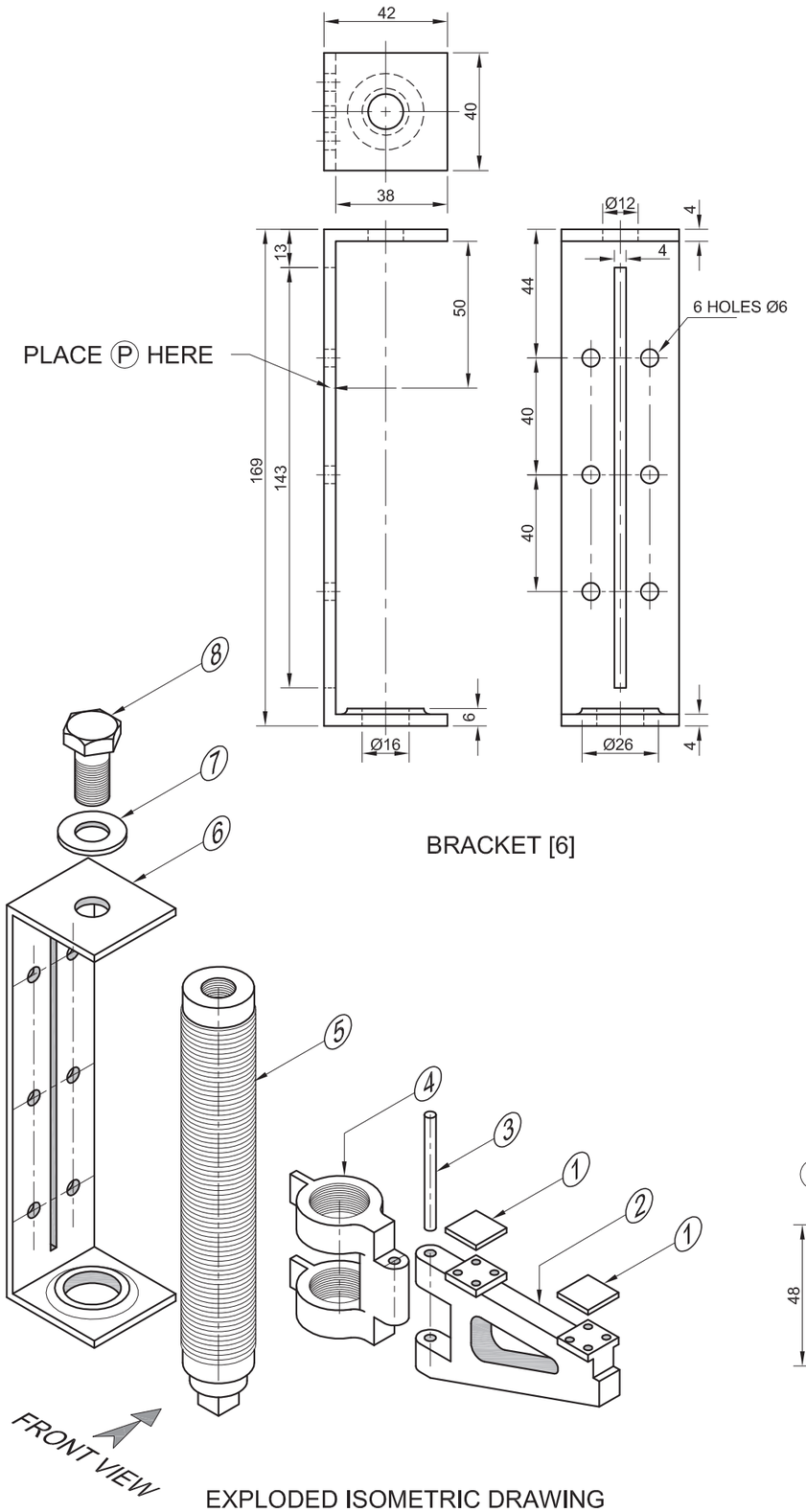

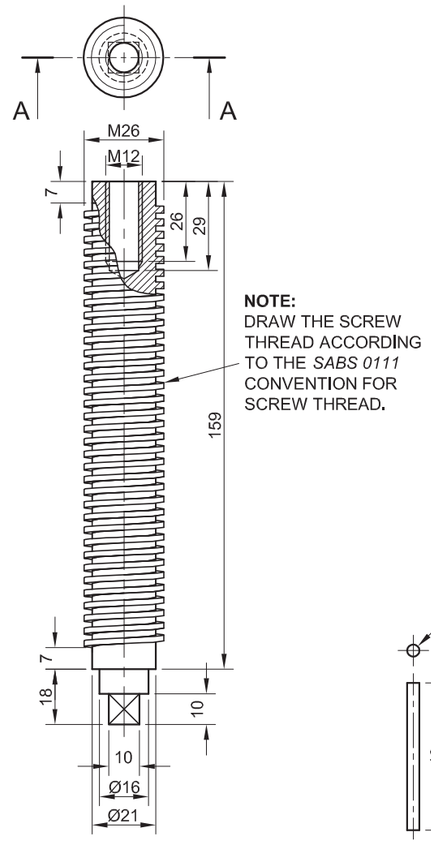

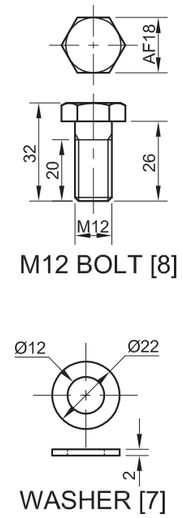

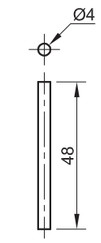

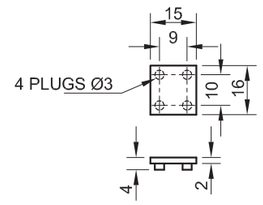

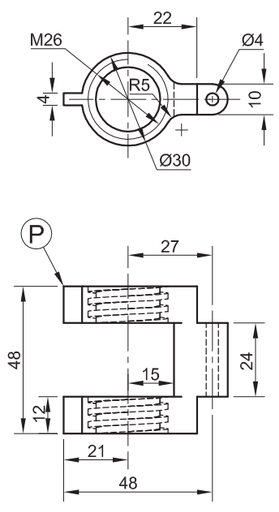

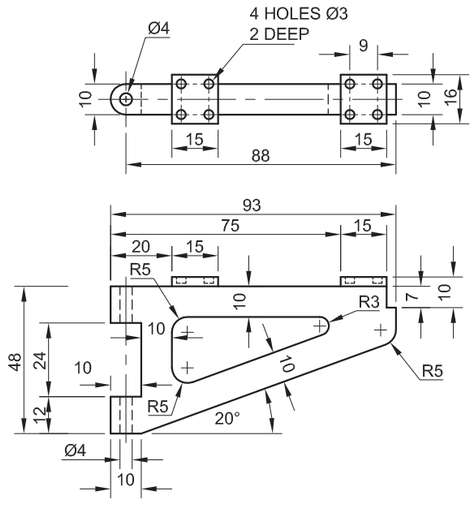

QUESTION 4: MECHANICAL ASSEMBLY

Given:

- The exploded isometric drawing of the parts of a jack assembly, showing the position of each part relative to all the others
- Orthographic views of each of the parts of the jack assembly

Instructions:

- Answer this question on page 6.
- Draw, to scale 1 : 1 and in third-angle orthographic projection, the following views of the assembled parts of the jack assembly:
  - **4.1 A sectional front view** on cutting plane A-A, as seen from the direction of the arrow shown on the exploded isometric drawing. The cutting plane, which passes through the vertical centre line of the assembly, is shown on the top view of the shaft (part 5).
  - **4.2 The top view**
- ALL drawings must comply with the guidelines contained in the *SABS 0111.*

NOTE:

- As indicated, place point P on the jack at point P on the bracket.
- Show THREE faces of the M12 bolt and ALL necessary construction.
- NO hidden detail is required.

Add the following features to the drawing:

- The cutting plane A-A
- Label the sectional view SECTION A-A. **[93]**

PARTS LIST

PART	QUANTITY	MATERIAL
1. PAD	2	BRONZE
2. JACK ARM	1	CAST IRON
3. PIN	1	MILD STEEL
4. JACK	1	CAST IRON
5. SHAFT	1	MILD STEEL
6. BRACKET	1	MILD STEEL
7. WASHER	1	MILD STEEL
8. M12 BOLT	1	MILD STEEL

MECHTECH
ENGINEERING

17 LONG STREET
NEW PARK
KIMBERLEY 8300
www.mtech.co.za
☏ 053 645 7820

JACK ASSEMBLY

ALL DIMENSIONS ARE IN MILLIMETRES.

ALL UNSPECIFIED RADII ARE R2.

Please turn over

STAPLE

ASSESSMENT CRITERIA					
SECTIONAL FRONT VIEW					
1	PAD	3			
2	JACK ARM	11			
3	PIN	1			
4	JACK	7½			
5	SHAFT	14½			
6	BRACKET	7			
7	WASHER	1			
8	M12 BOLT	11			
9	HATCHING	13			
SUBTOTAL		**69**			
TOP VIEW					
1	OUTLINE	10			
2	M12 BOLT + WASHER	3			
SUBTOTAL		**13**			
GENERAL					
1	CENTRE LINES	2			
2	CUTTING PLANE + TITLE	4			
3	ASSEMBLY	5			
SUBTOTAL		**11**			
TOTAL		**93**			
EXAMINATION NUMBER					
EXAMINATION NUMBER					6

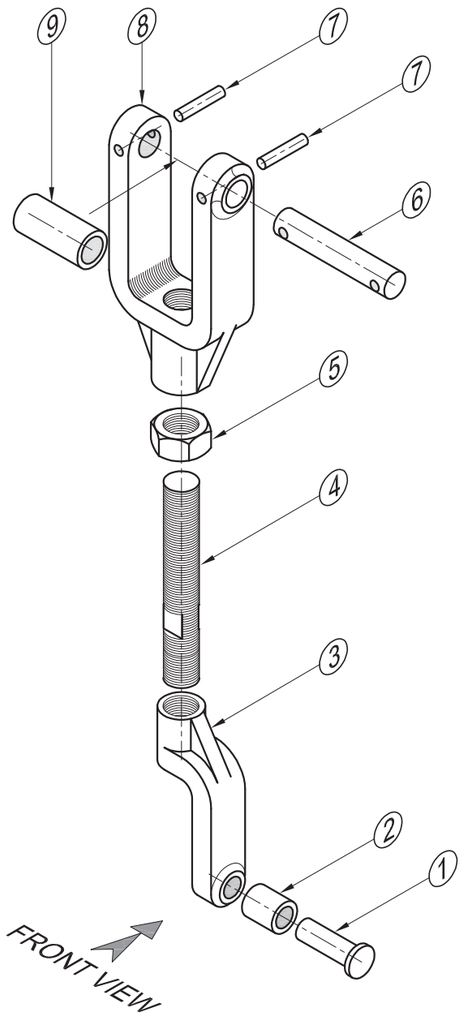

EXPLODED ISOMETRIC DRAWING

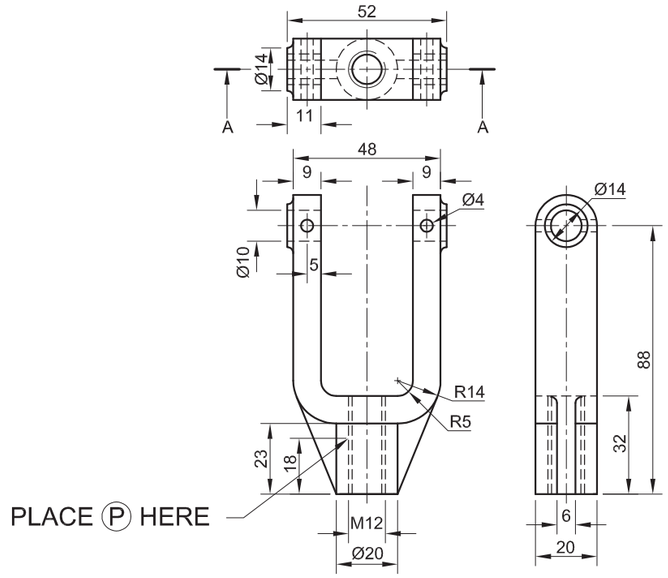

FORK [8]

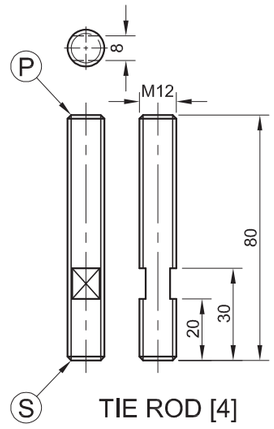

TIE ROD [4]

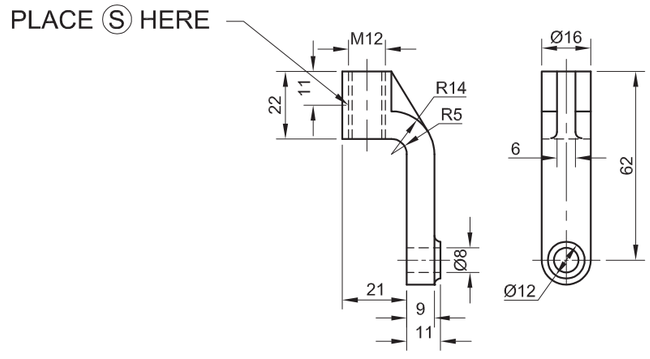

OFFSET ARM [3]

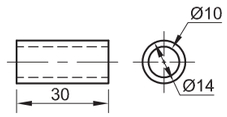

BUSH B [9]

DOWEL [7]

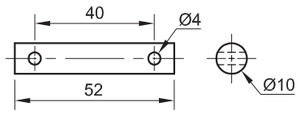

SHAFT B [6]

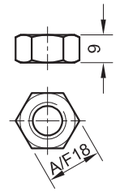

M12 LOCK NUT [5]

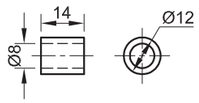

BUSH A [2]

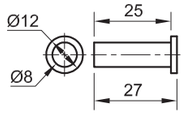

SHAFT A [1]

QUESTION 4: MECHANICAL ASSEMBLY

Given:

- The exploded isometric drawing of the parts of an offset connecting bar, showing the position of each part relative to all the others
- Orthographic views of each of the parts of the offset connecting bar assembly

Instructions:

- Answer this question on page 6.
- Draw, to scale 1 : 1 and in third-angle orthographic projection, the following views of the assembled parts of the offset connecting bar assembly:
  - **4.1 A sectional front view** on cutting plane A-A, as seen from the direction of the arrow shown on the exploded isometric drawing. The cutting plane, which passes vertically through the centre of the assembly, is shown on the top view of the fork (part 8).
  - **4.2 The right view**
- ALL drawing must comply with the guidelines contained in the *SABS 0111.*

NOTE:

- As indicated, place point P on the upper end of the tie rod with point P on the fork and point S on the lower end of the tie rod, with point S on the offset arm.
- Show THREE faces of the nut in the front view and ALL necessary construction.
- NO hidden detail is required.

Add the following features to the drawing:

- The cutting plane A-A
- Label the sectional view SECTION A-A. **[91]**

PARTS LIST

PART	QUANTITY	MATERIAL
1. SHAFT A	1	MILD STEEL
2. BUSH A	1	BRONZE
3. OFFSET ARM	1	CAST IRON
4. TIE ROD	1	MILD STEEL
5. M12 LOCK NUT	1	MILD STEEL
6. SHAFT B	1	MILD STEEL
7. DOWEL	2	MILD STEEL
8. FORK	1	CAST IRON
9. BUSH B	1	BRONZE

MECHTECH ENGINEERING
17 LONG STREET
NEW PARK
KIMBERLEY 8300
www.mtech.co.za
053 645 7820

OFFSET CONNECTING BAR

ALL DIMENSIONS ARE IN MILLIMETRES.

ALL UNSPECIFIED RADII ARE R2.

STAPLE

ASSESSMENT CRITERIA					
SECTIONAL FRONT VIEW					
1	SHAFT A	2			
2	BUSH A	1			
3	OFFSET ARM	7½			
4	TIE ROD	9			
5	M12 NUT	8			
6	SHAFT B	2			
7	DOWEL	1			
8	FORK	10½			
9	BUSH B	1			
H	HATCHING	12			
SUBTOTAL		**54**			
RIGHT VIEW					
3	OFFSET ARM	5½			
4	TIE ROD	5			
5	M12 NUT	4½			
8	FORK	6			
SUBTOTAL		**21**			
GENERAL					
1	CENTRE LINES	4			
2	CUTTING PLANE + TITLE	5			
3	ASSEMBLY	7			
SUBTOTAL		**16**			
TOTAL		**91**			

EXAMINATION NUMBER

EXAMINATION NUMBER 6

BASIC-EDUCATION

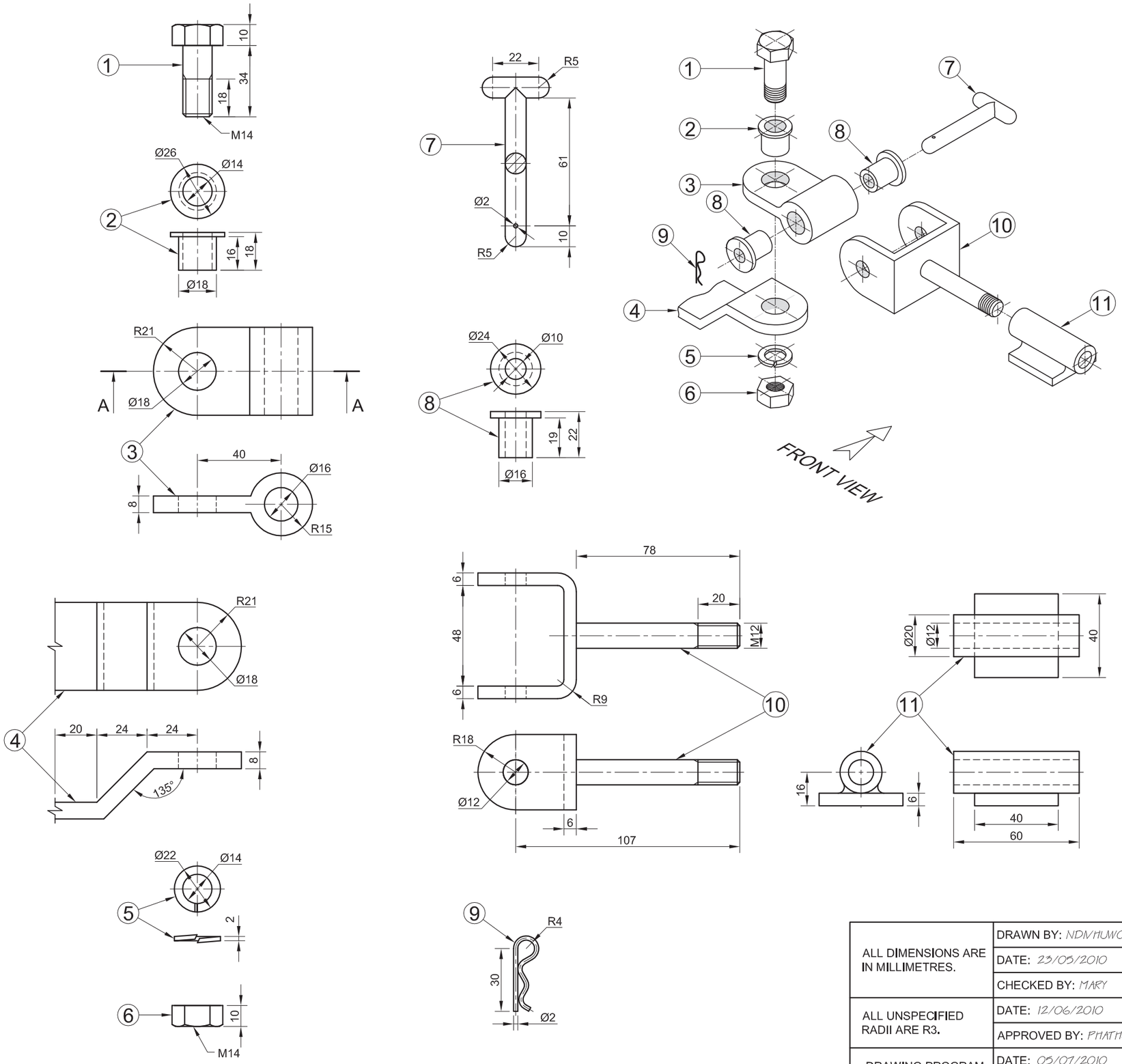

QUESTION 4: MECHANICAL ASSEMBLY

Given:

- The exploded isometric drawing of the parts of a coupling assembly for a trailer, showing the position of each part relative to all the others
- Orthographic views of each of the parts of the coupling assembly

Instructions:

- Answer this question on page 6.
- Draw, to scale 1 : 1 and in third-angle orthographic projection, the following views of the assembled parts of the coupling assembly:
  - **4.1 A sectional front view** on cutting plane A-A, as seen from the arrow shown on the exploded isometric drawing. The cutting plane is shown on the top view of the swivel (part 3).
  - **4.2 The top view.**
- ALL drawings must comply with the guidelines contained in the *SABS 0111.*

NOTE:

- Show THREE faces of the M14 bolt and nut and ALL necessary construction.
- NO hidden detail is required.

Add the following feature to the drawing:

- The cutting plane A-A **[97]**

PARTS LIST

PART	QUANTITY	MATERIAL
1. M14 BOLT	1	MILD STEEL
2. BUSH	1	HIGH-TENSILE STEEL
3. SWIVEL	1	MILD STEEL
4. FIXED ARM	1	MILD STEEL
5. SPRING WASHER	1	HARDENED STEEL
6. M14 NUT	1	MILD STEEL
7. PIN	1	HARDENED STEEL
8. BUSH	2	NYLON
9. LOCKING PIN	1	SPRING STEEL
10. YOKE	1	MILD STEEL
11. MOUNTING BRACKET	1	MILD STEEL

ALL DIMENSIONS ARE IN MILLIMETRES.	DRAWN BY: NDIVHUWO	IBAYHI STEEL MANUFACTURING	OLD CAPE ROAD GREENBUSHES 6025 www.ibayhisteel.co.za
	DATE: 23/05/2010		
	CHECKED BY: MARY		
ALL UNSPECIFIED RADII ARE R3.	DATE: 12/06/2010	TITLE TRAILER COUPLING	
	APPROVED BY: PHATHU		
DRAWING PROGRAM: AUTOCAD 2008	DATE: 05/07/2010	NATIONAL SENIOR CERTIFICATE GRADE 12 FEB./MAR. 2011	5
	SCALE: 1 : 2		

STAPLE

ASSESSMENT CRITERIA				
TOP VIEW				
	POSSIBLE	OBTAINED	SIGN	MODERATE
1. M14 BOLT	3			
2. BUSH	1			
3. SWIVEL	3			
4. FIXED ARM	$2\frac{1}{2}$			
5. PIN	4			
6. BUSH	2			
7. LOCKING PIN	1			
8. YOKE	10			
9. MOUNTING BRACKET	$4\frac{1}{2}$			
SUBTOTAL	**31**			
SECTIONAL FRONT VIEW				
1. M14 BOLT	$10\frac{1}{2}$			
2. BUSH	$3\frac{1}{2}$			
3. SWIVEL	$3\frac{1}{2}$			
4. FIXED ARM	4			
5. SPRING WASHER	$2\frac{1}{2}$			
6. M14 NUT	5			
7. PIN	1			
8. YOKE	9			
9. MOUNTING BRACKET	4			
SUBTOTAL	**43**			
GENERAL				
THIRD ANGLE	2			
◇ CENTRE LINES	3			
⊗ SECTION A-A	4			
▲ HATCHING	9			
ASSEMBLY ½ MARK OF EVERY PART CORRECTLY ASSEMBLED	5			
SUBTOTAL	**23**			
TOTAL	**97**			

EXAMINATION NUMBER	
EXAMINATION NUMBER	6

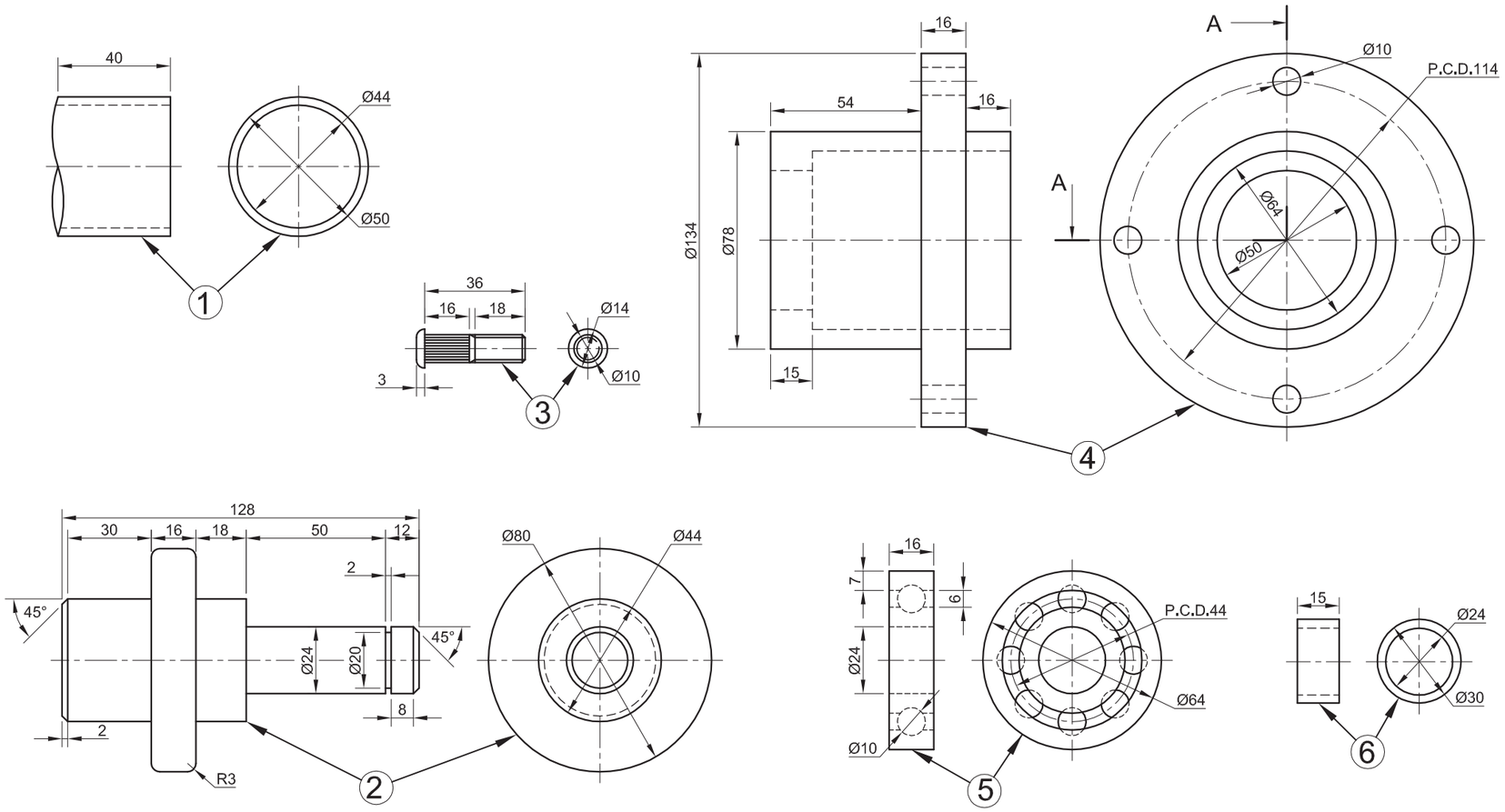

QUESTION 4: MECHANICAL ASSEMBLY

Given:

- The exploded isometric drawing of the parts of a wheel-hub assembly for a trailer, showing the position of each part relative to all the others
- Orthographic views of each of the parts of the wheel-hub assembly for a trailer

Instructions:

- Answer this question on page 6.
- Draw, to scale 1 : 1 and in third-angle orthographic projection, the following views of the assembled parts of the wheel-hub assembly for a trailer:
  - **4.1 A half-sectional front view**, with the top half in section, on cutting plane A-A, as seen from the direction of the arrow shown on the exploded isometric drawing. The cutting plane is shown on the right view of the wheel hub (part 4).
  - **4.2 The right view** with the **hub cap removed**.
- ALL drawings must comply with the guidelines contained in the *SABS 0111*.

NOTE:

- Only the top wheel stud must be shown in the assembly.
- The ball bearings must be drawn in detail.
- No hidden detail is required.

Add the following features to the drawing:

- The cutting plane A-A
- Label the half-sectional view: SECTION A-A **[97]**

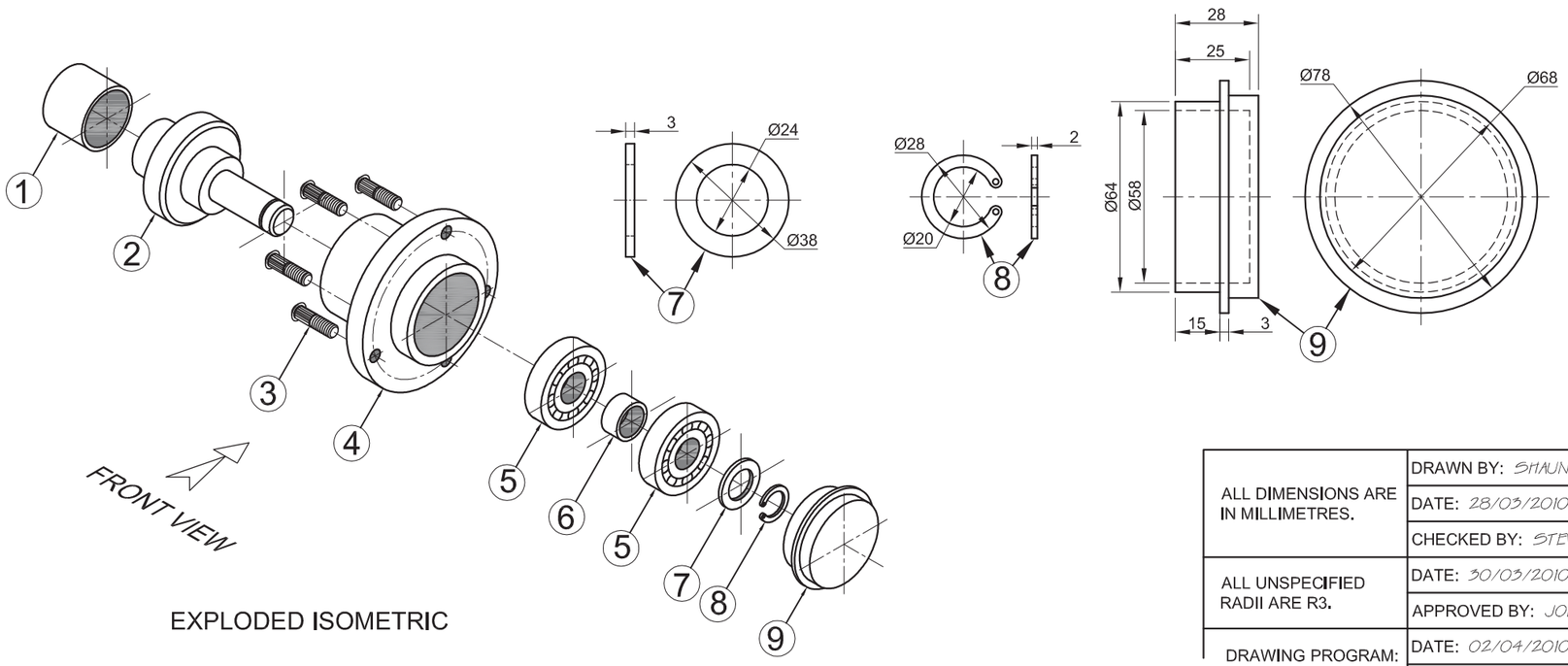

EXPLODED ISOMETRIC

PARTS LIST		
PART	QUANTITY	MATERIAL
1. AXLE PIPE	1	MILD STEEL
2. STUB AXLE	1	MILD STEEL
3. WHEEL STUD	4	HARDENED STEEL
4. WHEEL HUB	1	CAST IRON
5. BALL BEARING	2	HARDENED STEEL
6. SPACER	1	MILD STEEL
7. WASHER	1	MILD STEEL
8. CIRCLIP	1	SPRING STEEL
9. HUB CAP	1	MILD STEEL

ALL DIMENSIONS ARE IN MILLIMETRES.	DRAWN BY: SHAUN	RHINO STEEL MANUFACTURING	FOREST DRIVE AMALINDA 5247 www.rhinosteel.co.za
	DATE: 28/03/2010		
	CHECKED BY: STEVEN		
ALL UNSPECIFIED RADII ARE R3.	DATE: 30/03/2010	TITLE TRAILER-WHEEL HUB ASSEMBLY	
	APPROVED BY: JOHAN		
DRAWING PROGRAM: AUTOCAD 2008	DATE: 02/04/2010	NATIONAL SENIOR CERTIFICATE GRADE 12 NOVEMBER 2010	5
	SCALE: 1 : 1		

STAPLE

ASSESSMENT CRITERIA				
HALF-SECTIONAL FRONT VIEW				
	POSSIBLE	OBTAINED	SIGN	MODERATE
THIRD ANGLE	2			
1. AXLE PIPE	3			
2. STUB AXLE	$9\frac{1}{2}$			
3. WHEEL STUD	$8\frac{1}{2}$			
4. WHEEL HUB	8			
5. BEARINGS	7			
6. SPACER	1			
7. WASHER	$1\frac{1}{2}$			
8. CIRCLIP	$1\frac{1}{2}$			
9. HUB CAP	5			
SUBTOTAL	**47**			
RIGHT VIEW + GENERAL				
1. WHEEL HUB	$4\frac{1}{2}$			
2. WHEEL STUD	2			
3. BEARING	9			
4. WASHER	1			
5. CIRCLIP	3			
6. STUB AXLE	2			
7. ASSEMBLY	9			
8. SECTION A-A	4			
9. CENTRE LINES	4			
10. HATCHING	$11\frac{1}{2}$			
SUBTOTAL	**50**			
TOTAL	**97**			

EXAMINATION NUMBER	
EXAMINATION NUMBER	6

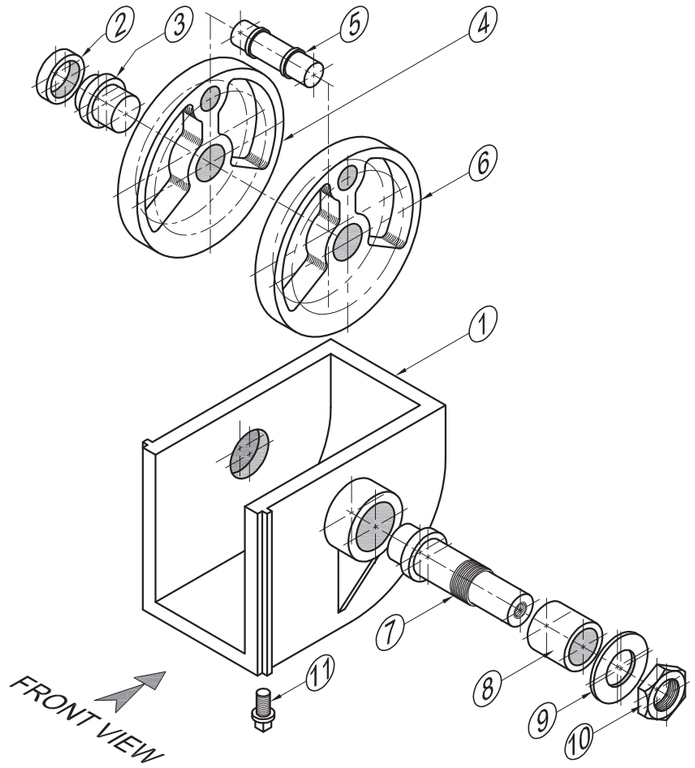

EXPLODED ISOMETRIC DRAWING

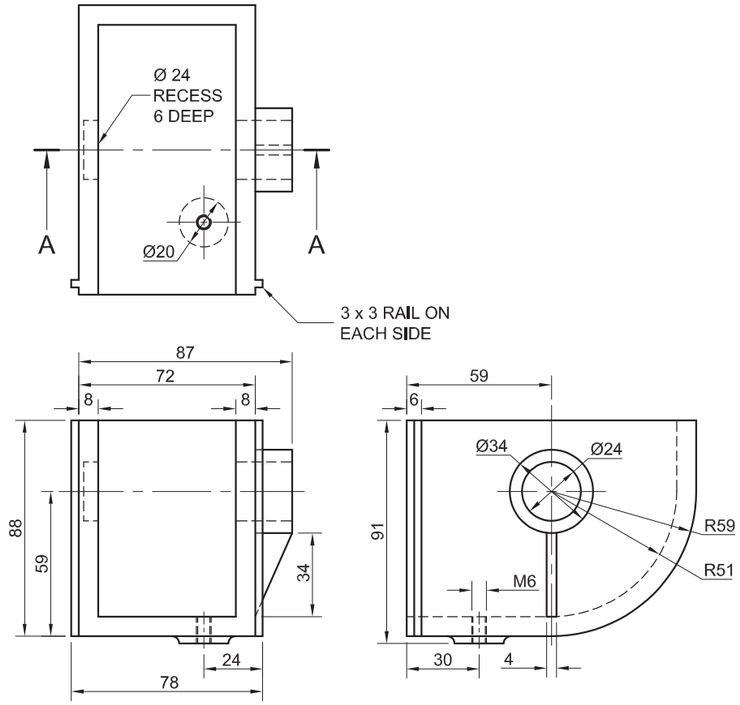

HOUSING [1]

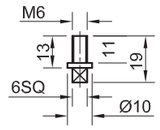

DRAIN PLUG [11]

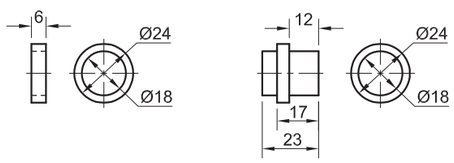

BUSH A [2] SHORT SHAFT [3]

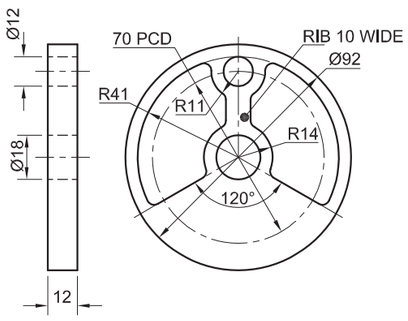

LEFT FLYWHEEL [4]

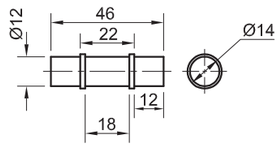

JOURNAL [5]

NOTE:
SHOW THE JOURNAL IN THE HIGHEST POSITION.

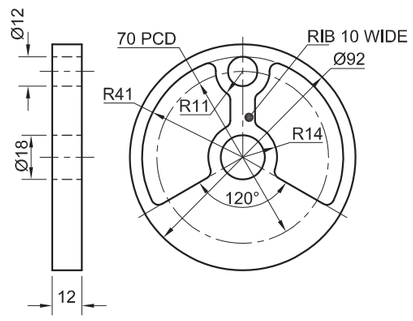

RIGHT FLYWHEEL [6]

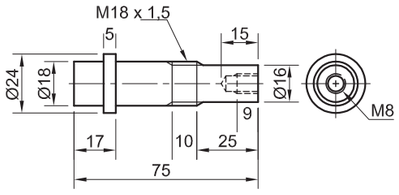

DRIVE SHAFT [7]

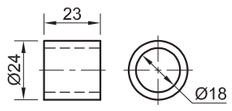

BUSH B [8]

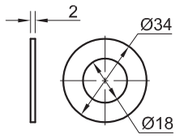

WASHER [9]

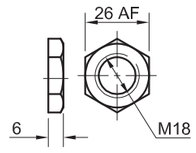

SPECIAL NUT [10]

QUESTION 4: ASSEMBLY DRAWING

Given:

- The exploded isometric drawing of the parts of a crank assembly, showing the position of each part relative to all the others
- Orthographic views of each of the parts of the crank assembly

Instructions:

- Answer this question on page 6.
- Draw, to scale 1:1 and in third-angle orthographic projection, the following views of the assembled parts of the crank assembly:
  - **4.1 The sectional front view** on cutting plane A-A, as seen from the direction of the arrow shown in the exploded isometric drawing. The vertical cutting plane passes through the centre line of the assembly, as shown on the top view of the housing.
  - **4.2 The right view.** NO hidden detail is required.
- ALL drawings must comply with the guidelines contained in the *SABS 0111.*

Add the following features to the drawing:

- The cutting plane A-A
- Label the sectional view: SECTION A-A.

NOTE:
Show THREE faces of the special nut and ALL necessary construction. **[94]**

PARTS LIST

PART	QUANTITY	MATERIAL
1. HOUSING	1	CAST IRON
2. BUSH A	1	BRONZE
3. SHORT SHAFT	1	MILD STEEL
4. LEFT FLYWHEEL	1	CAST IRON
5. JOURNAL	1	MILD STEEL
6. RIGHT FLYWHEEL	1	CAST IRON
7. DRIVE SHAFT	1	MILD STEEL
8. BUSH B	1	BRONZE
9. WASHER	1	MILD STEEL
10. SPECIAL NUT	1	MILD STEEL
11. DRAIN PLUG	1	MILD STEEL

eBHAYI
ENGINEERING PTY (LTD)
73 ACACIA AVENUE
PORT ELIZABETH
6001
041 645 7820

CRANK ASSEMBLY

ALL DIMENSIONS ARE IN MILLIMETRES.
ALL UNSPECIFIED RADII ARE 3.

STAPLE

ASSESSMENT CRITERIA					
SECTIONAL FRONT VIEW					
		POSSIBLE	OBTAINED	SIGN	MODERATE
1	HOUSING	7			
2	BUSH A + SHORT SHAFT	5			
3	FLYWHEELS	6			
4	JOURNAL	4			
5	BUSH B + DRIVE SHAFT	$11\frac{1}{2}$			
6	WASHER + NUT	7			
7	HATCHING + NON-HATCHING	14			
8	LABELS + CENTRE LINES	2			
SUBTOTAL		$56\frac{1}{2}$			
RIGHT VIEW					
1	HOUSING	$6\frac{1}{2}$			
2	DRAIN PLUG	4			
3	FLYWHEEL	4			
4	DRIVE SHAFT	2			
5	NUT + WASHER	4			
6	CUTTING PLANE + CENTRE LINES	5			
7	3RD ANGLE RIGHT VIEW	2			
8	ASSEMBLY	10			
SUBTOTAL		$37\frac{1}{2}$			
TOTAL		**94**			
EXAMINATION NUMBER					
EXAMINATION NUMBER					6

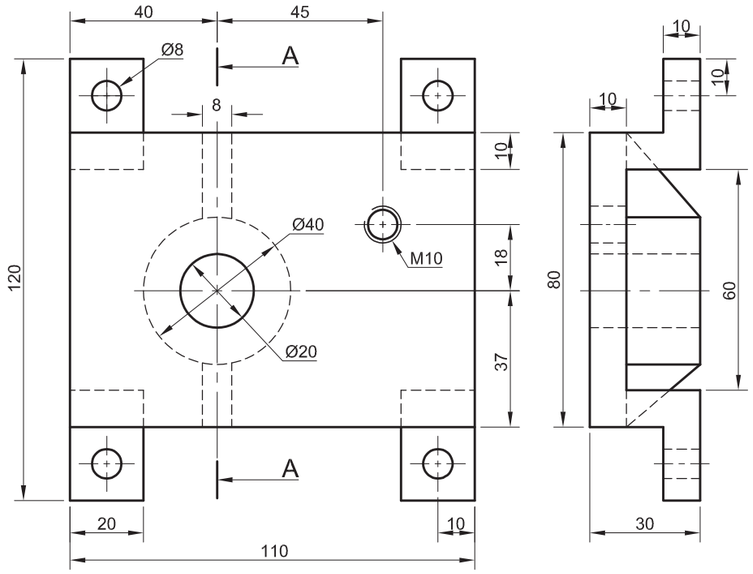

BASE [2]

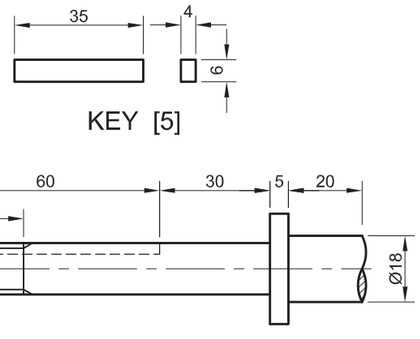

KEY [5]

SHAFT [1]

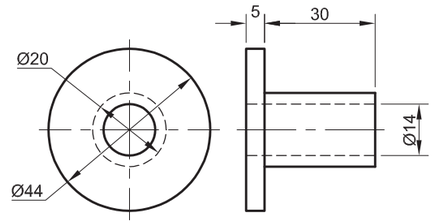

BUSH [3]

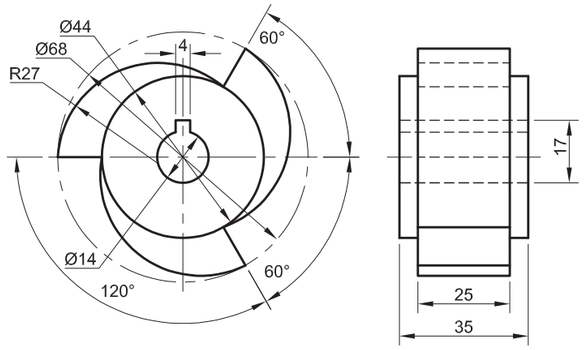

RATCHET [4]

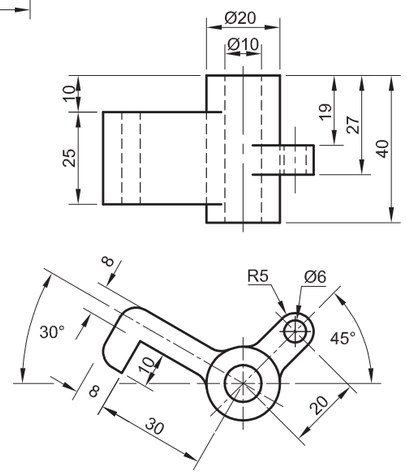

RATCHET ARM [9]

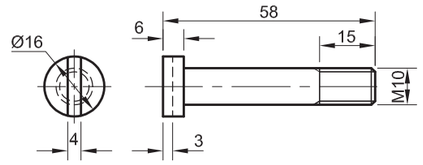

SCREW [8]

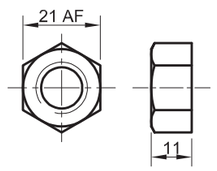

M14 NUT [7]

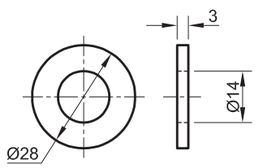

WASHER [6]

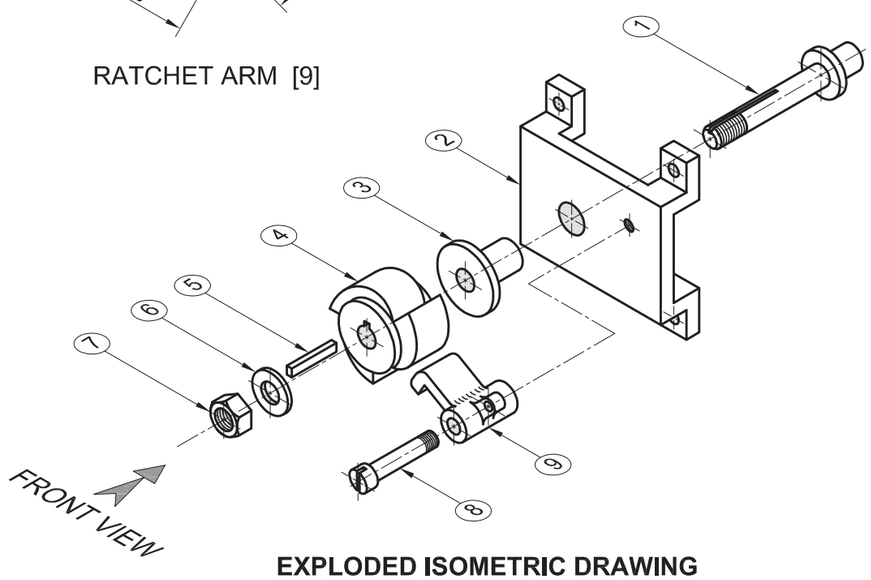

EXPLODED ISOMETRIC DRAWING

QUESTION 4: ASSEMBLY DRAWING

Given:
The exploded isometric drawing of the parts of a ratchet and base, showing the position of each part relative to all the others.

Orthographic views of each of the parts of the ratchet and base.

Instructions:
Answer this question on page 6.
Draw, to scale 1:1 and in third-angle orthographic projection, the following views of the assembled parts of the ratchet and base:

4.1 The front view as seen from the direction of the arrow indicated in the exploded isometric drawing. NO hidden detail is required.

4.2 A sectional right view on cutting plane A-A. The vertical cutting plane passes through the centre line of the assembly, as shown on the front view of the base.

- ALL drawings must comply with the guidelines contained in the *SABS 0111*.

Add the following feature to the drawing:
- The cutting plane A-A

Note:
- Show THREE faces of the M14 nut and ALL necessary construction. **[93]**

PARTS LIST		
PART	QUANTITY	MATERIAL
1. SHAFT	1	MILD STEEL
2. BASE	1	MILD STEEL
3. BUSH	1	BRASS
4. RATCHET	1	CAST IRON
5. KEY	1	MILD STEEL
6. WASHER	1	SPRING STEEL
7. M14 NUT	1	MILD STEEL
8. SCREW	1	MILD STEEL
9. RATCHET ARM	1	CAST IRON

EGD ENGINEERING (SA) (PTY) LTD

188 SCHOEMAN STREET
PRETORIA
0001
www.egdengineering.co.za
☎ 012 555 2345

RATCHET AND BASE

ALL DIMENSIONS ARE IN MILLIMETRES

ALL UNSPECIFIED RADII ARE 5

Please turn over

STAPLE

ASSESSMENT CRITERIA				
SECTIONAL VIEW				
	POSSIBLE	OBTAINED	SIGN	MODERATE
1. BASE	10			
2. SHAFT	11			
3. BUSH	3			
4. RATCHET	6			
5. KEY	1½			
6. WASHER + M14 NUT	6½			
7. HATCHING	10½			
FRONT VIEW				
1. BASE	8			
2. SHAFT	2½			
3. WASHER + M14 NUT	3			
4. RATCHET	3½			
5. RATCHET ARM	7½			
6. PIN	1½			
7. CUTTING PLANE A-A	3			
CENTRE LINES	$15 \times \frac{1}{2} = 7\frac{1}{2}$			
ASSEMBLY	6			
3rd ANGLE	2			
TOTAL	**93**			
EXAMINATION NUMBER				
EXAMINATION NUMBER				6

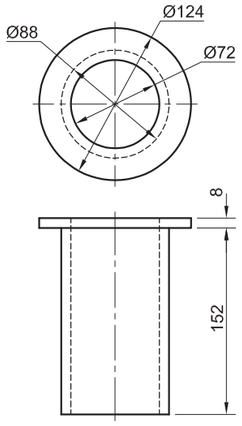

BUSH

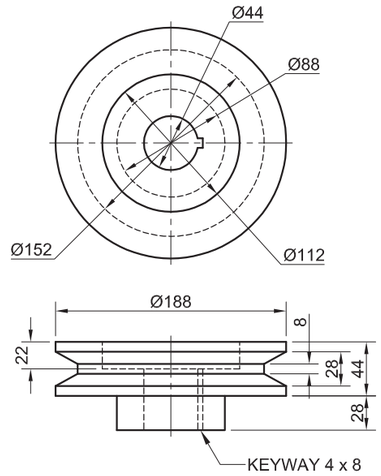

PULLEY

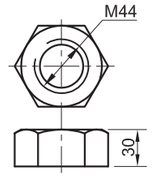

M44 NUT

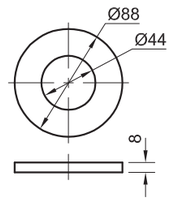

WASHER

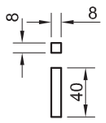

KEY

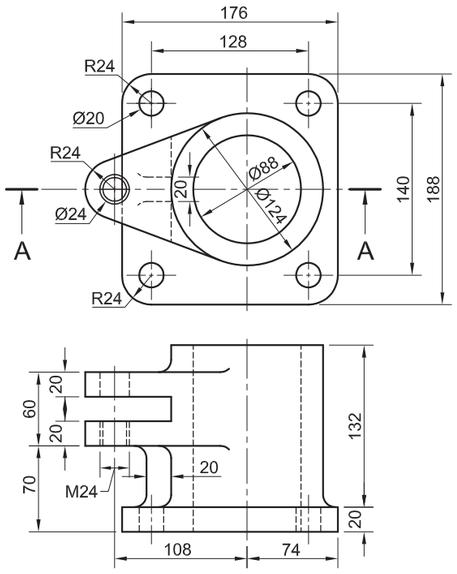

SUPPORT BRACKET

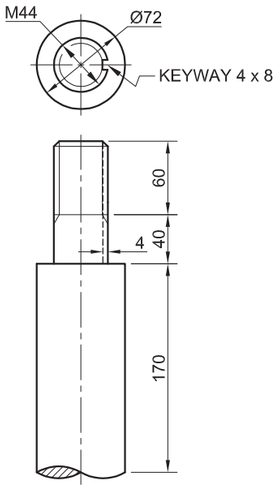

SHAFT

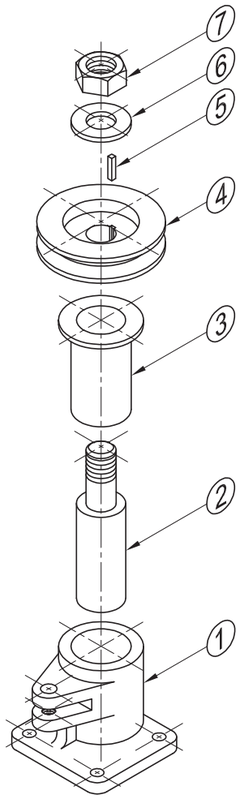

EXPLODED ISOMETRIC

QUESTION 4: ASSEMBLY DRAWING

Given:
The exploded isometric drawing of the parts of a vertical support bracket, showing the position of each part relative to all the others.

Orthographic views of each of the parts of the vertical support bracket.

Instructions:
Answer this question on ANSWER SHEET 4 on page 6.
Draw to scale 1:2 the following views of the assembled parts of the vertical support bracket:

4.1 The full sectional front view on A-A as seen from the arrow indicated in the exploded isometric drawing. The vertical cutting plane passes through the centre line of the assembly as shown on the top view of the support bracket.

4.2 A top view of the the assembly. No hidden detail is required.

- ALL drawing must comply with the guidelines contained in the *SABS 0111.*

Add the following feature to the drawing:
- The cutting plane. Label it A A.

Note:
- Show THREE faces of the M44 nut and ALL necessary construction. **[95]**

PARTS LIST		
PART	QUANTITY	MATERIAL
1. SUPPORT BRACKET	1	CAST IRON
2. SHAFT	1	MILD STEEL
3. BUSH	1	BRASS
4. PULLEY	1	CAST IRON
5. KEY	1	MILD STEEL
6. WASHER	1	SPRING STEEL
7. M44 NUT	1	MILD STEEL

ALL DIMENSIONS ARE IN MILLIMETRES	DRAWN: SIBU	CAPE STEEL MANUFACTURING	FOREST DRIVE GOODWOOD 5240 www.capesteel.co.za
	DATE: 22/10/08		
	CHECKED: PENNY		
ALL UNSPECIFIED RADII ARE R10	DATE: 25/10/08	TITLE VERTICAL SUPPORT BRACKET	
	APPROVED: SAREL		
DRAWING PROGRAM: AUTOCAD 2008	DATE: 26/10/08	NATIONAL SENIOR CERTIFICATE GRADE 12 NOVEMBER 2008	5
	SCALE: 1:1		

STAPLE

ANSWER SHEET 4

ASSESSMENT CRITERIA

FRONT VIEW	FACET		SECTIONING		TOTAL	
	POSSIBLE	OBTAINED	POSSIBLE	OBTAINED	POSSIBLE	OBTAINED
1. SUPPORT BRACKET	16		5		21	
2. SHAFT	$10\frac{1}{2}$		$1\frac{1}{2}$		12	
3. BUSH	3		1		4	
4. PULLEY	10		2		12	
5. KEY	1		$\frac{1}{2}$		$1\frac{1}{2}$	
6. WASHER	$1\frac{1}{2}$		$\frac{1}{2}$		2	
7. M44 NUT	5		$\frac{1}{2}$		$5\frac{1}{2}$	
TOP VIEW	**FACET**		**SECTIONING**		**TOTAL**	
	POSSIBLE	OBTAINED	POSSIBLE	OBTAINED	POSSIBLE	OBTAINED
1. SUPPORT BRACKET	$13\frac{1}{2}$				$13\frac{1}{2}$	
2. SHAFT	2				2	
3. PULLEY	2				2	
4. WASHER	1				1	
5. M44 NUT	4				4	
6. CUTTING PLANE A A	2				2	
CENTRE LINES					$6\frac{1}{2}$	
ASSEMBLY					6	
				TOTAL	95	

EXAMINATION NUMBER	
EXAMINATION NUMBER	6

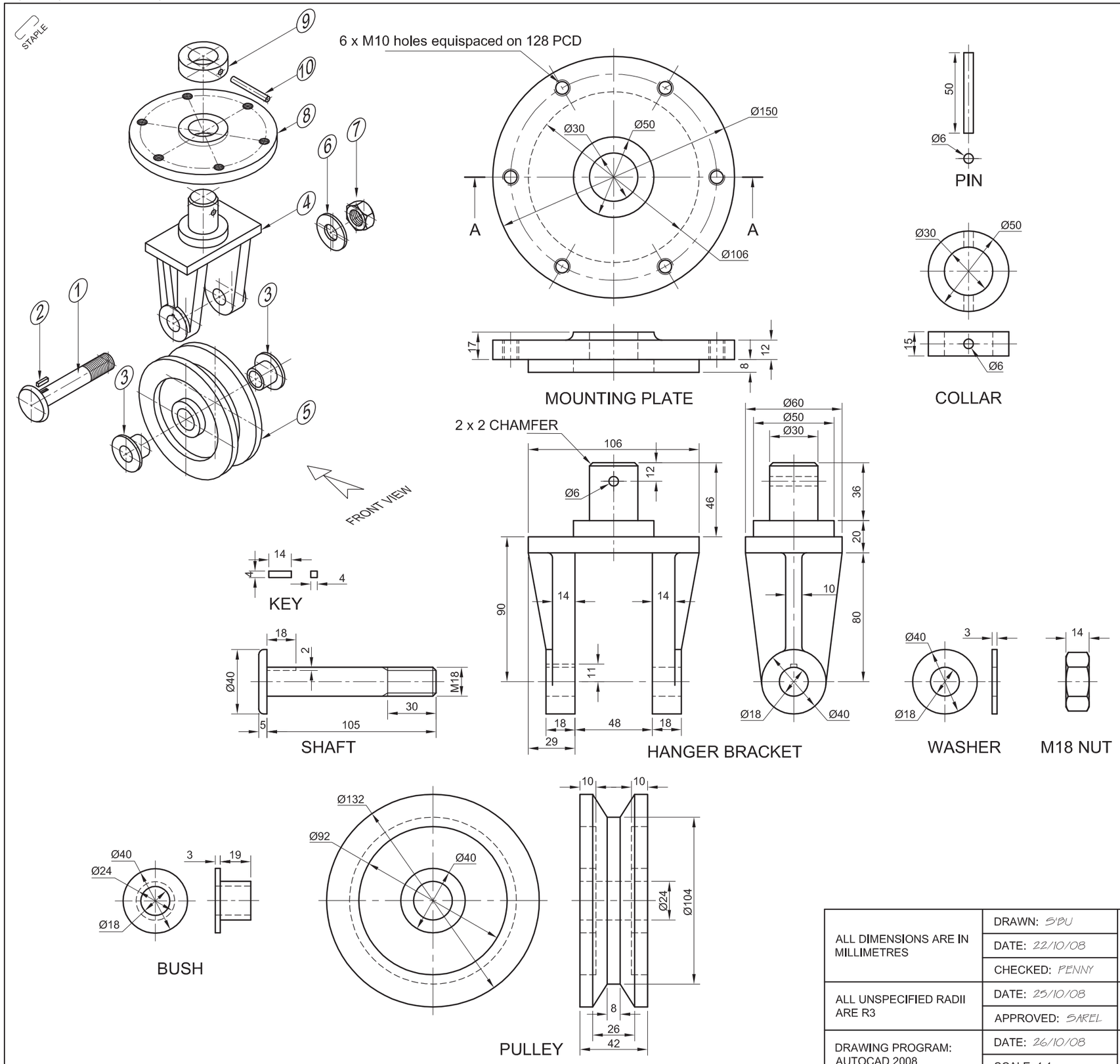

QUESTION 4: ASSEMBLY DRAWING

Given:
The exploded isometric drawing of the parts of an overhead swivel pulley, showing the position of each part relative to all the others.

Orthographic views of each of the parts of the overhead swivel pulley.

Instructions:
Answer this question on ANSWER SHEET 4 on page 6.
Draw, to scale 1:1, the following view of the assembled parts of the overhead swivel pulley:

- The full sectional front view on A-A as seen from the arrow indicated in the exploded isometric drawing. The vertical cutting plane passes through the centre line of the assembly as shown on the top view of the mounting plate.

Note:

- Show THREE faces of the M18 nut and ALL necessary construction.
- ALL drawing must comply with the guidelines contained in the *SABS 0111.*

[98]

PARTS LIST		
PART	QUANTITY	MATERIAL
1. SHAFT	1	MILD STEEL
2. KEY	1	MILD STEEL
3. BUSH	2	BRASS
4. HANGER BRACKET	1	MILD STEEL
5. PULLEY	1	CAST IRON
6. WASHER	1	SPRING STEEL
7. M18 NUT	1	MILD STEEL
8. MOUNTING PLATE	1	MILD STEEL
9. COLLAR	1	MILD STEEL
10. PIN	1	MILD STEEL

ALL DIMENSIONS ARE IN MILLIMETRES	DRAWN: S'BU	MEGA MANUFACTURING	DIAS STREET EAST LONDON 5240 www.mega.co.za
	DATE: 22/10/08		
	CHECKED: PENNY		
ALL UNSPECIFIED RADII ARE R3	DATE: 25/10/08	TITLE OVERHEAD SWIVEL PULLEY	
	APPROVED: SAREL		
DRAWING PROGRAM: AUTOCAD 2008	DATE: 26/10/08	NATIONAL SENIOR CERTIFICATE GRADE 12 NOVEMBER 2008	PAGE 5
	SCALE: 1:1		

STAPLE

ANSWER SHEET 4

ASSESSMENT CRITERIA

	FACET		SECTIONING		TOTAL	
	POSSIBLE	OBTAINED	POSSIBLE	OBTAINED	POSSIBLE	OBTAINED
1. SHAFT	8½		½		9	
2. KEY	1		1½		2½	
3. BUSH	4		3		7	
4. HANGER BRACKET	15		4½		19½	
5. PULLEY	14		3		17	
6. WASHER	1		½		1½	
7. M18 NUT	6½		½		7	
8. MOUNTING PLATE	12		3		15	
9. COLLAR	2		1		3	
10. PIN	1		½		1½	
CENTRE LINES					5	
ASSEMBLY					10	
				TOTAL	**98**	

EXAMINATION NUMBER	
EXAMINATION NUMBER	6

STAPLE

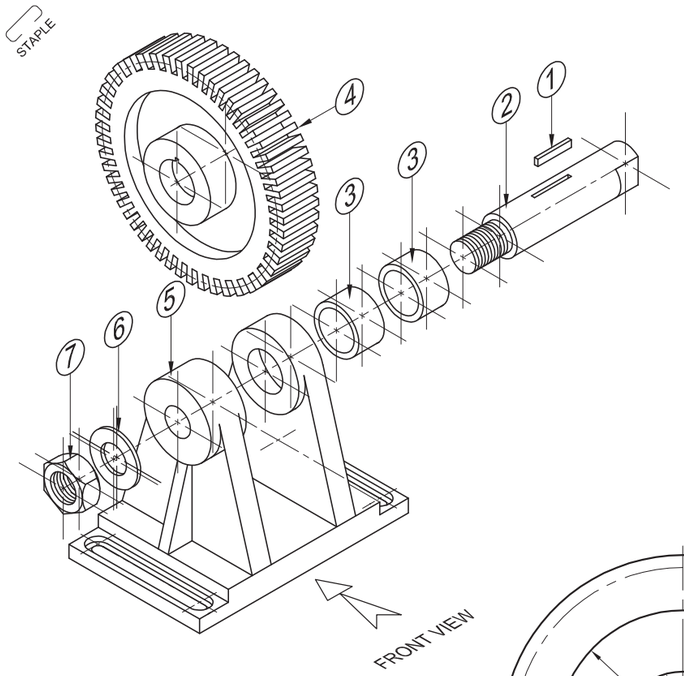

EXPLODED ISOMETRIC DRAWING

QUESTION 4: ASSEMBLY DRAWING

Given:
The exploded isometric drawing of the parts of a spur gear sub-assembly, showing the position of each part relative to all the others.

Orthographic views of each of the parts of the spur gear sub-assembly.

Instructions:
Answer this question on ANSWER SHEET 4 on page 5.
Draw, to scale 1:1, the following views of the assembled parts of the spur gear sub-assembly:

- The full sectional front view on A-A as seen from the arrow indicated in the exploded isometric drawing. The cutting plane passes through the vertical centre line of the assembly as shown on the housing bracket. Label the sectioned view.
- The left view. NO hidden detail is required. Show the cutting plane.

Note:

- Show THREE faces of the M16 nut and ALL necessary construction.
- Draw the conventional representation of the spur gear in accordance with the *SABS 0111*.
- ALL drawing must comply with the guidelines contained in the *SABS 0111.*

[90]

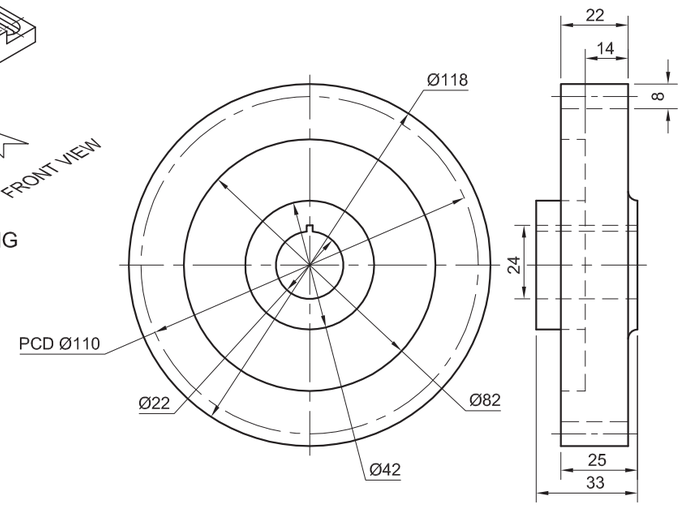

SPUR GEAR

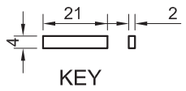

KEY

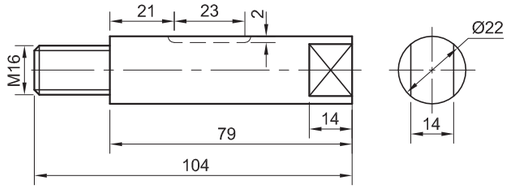

SHAFT

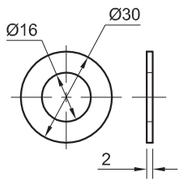

WASHER

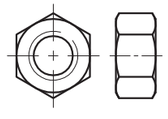

M16 NUT

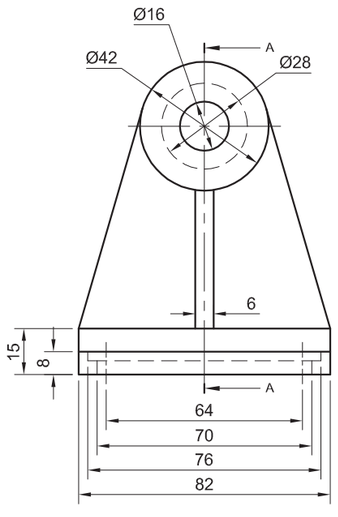

HOUSING BRACKET

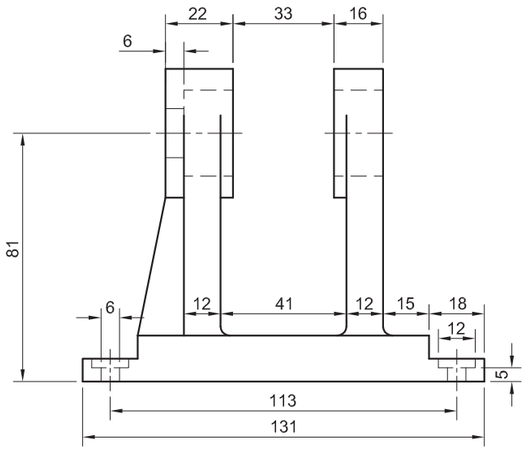

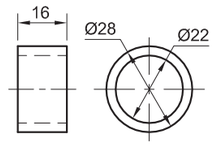

BUSH

PARTS LIST		
PART	QUANTITY	MATERIAL
1. KEY	1	MILD STEEL
2. SHAFT	1	MILD STEEL
3. BUSH	2	BRASS
4. SPUR GEAR	1	MILD STEEL
5. HOUSING BRACKET	1	CAST IRON
6. WASHER	1	SPRING STEEL
7. M16 NUT	1	MILD STEEL

ALL DIMENSIONS ARE IN MILLIMETRES	DRAWN: CAREN	TSIMBI CORPORATION	TSHEDZA STREET THOHOYANDOU 0950 www.tsimbi.co.za
	DATE: 26/05/07		
	CHECKED: PHILIMON		
ALL UNSPECIFIED RADII ARE R3	DATE: 27/05/07	TITLE SPUR GEAR SUB-ASSEMBLY	
	APPROVED: SAREL		
DRAWING PROGRAM: AUTOCAD 2007	DATE: 31/05/07	NATIONAL SENIOR CERTIFICATE GRADE 12 EXEMPLAR 2008	PAGE 6
	SCALE: 1:2		

STAPLE

ANSWER SHEET 4

ASSESSMENT CRITERIA

	FACET		SECTIONING		TOTAL	
	POSSIBLE	OBTAINED	POSSIBLE	OBTAINED	POSSIBLE	OBTAINED
1 KEY	2		1		3	
2 SHAFT	10		2½		12½	
3 BUSH	4		2		6	
4 SPUR GEAR	11		4½		15½	
5 HOUSING BRACKET	15½		6		21½	
6 WASHER	1		½		1½	
7 M16-NUT	4½		½		5	
CENTRE LINES					5	
ASSEMBLY					7	
LEFT VIEW					9	
CUTTING PLANE					1	
LABEL VIEW					1	
AUXILIARY VIEW					2	
				TOTAL	**90**	

EXAMINATION NUMBER	
EXAMINATION NUMBER	5